Open Sensor Systems:

Navy Needs and Usage

Presented by
David Perrussel
SMMOA Project Lead

Tuesday June 8, 2004

Overview

- **Navy's Unique Needs for Open Architecture Sensor Networks**

- **Navy’s Current Risk Mitigation Efforts**
  - SmartShip Program
  - SMMOA Program

- **New Navy ship classes**
  - DD(X) - TheNext-Generation Destroyer
  - LCS – Littoral Combat Ship

- **Upcoming Projects**

Automation and Open Architecture

- **Reduced/optimized** manning requirement for current and future ship classes drives the need for increased **automation**.

- Increased automation will require a significantly **increased number of transducers** installed aboard ship
  - Possibility of **25,000 (or more)** transducers on future ship classes
  - Levies unique requirements for future Naval platforms

- **Open architecture** approach will be key to achieving vision of highly automated ship in a cost effective manner
  - Reduced installation costs
  - Allow for Technology Insertion / Upgrade
  - Allow for streamlined Maintenance & Supply

Utilization of Open Systems Architecture

- The **Open System Architecture (OSA)** concept was developed by the **computing industry** in the 1970's and 1980s to help compatibility among vendors, thus reduce costs.
- Involves defining an architecture and "**open standards**" for interfaces within that architecture
- Multiple companies are then free to build (innovative) products that "plug into" open standard
- **Widely used throughout Information Technology (IT) Industry**

Examples of OSA Interfaces

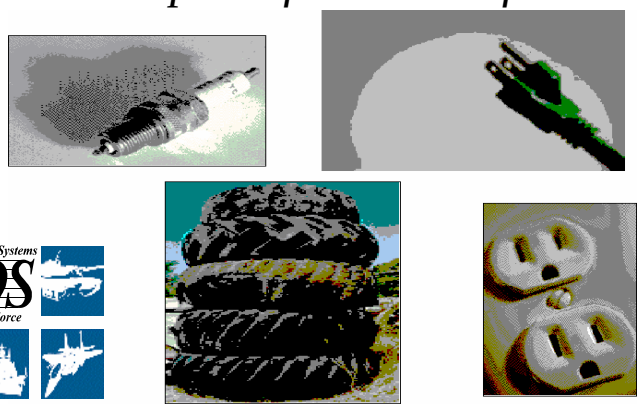

"Plug and Play" Storage Devices for common interface

Navy's Unique Needs For Open Sensor Networks

- Platforms with increasingly long lifecycles (30+ years)
- Increased used of commercial technologies
- Short lifecycles of COTS (<7 years)
  Often obsolete by time fielded

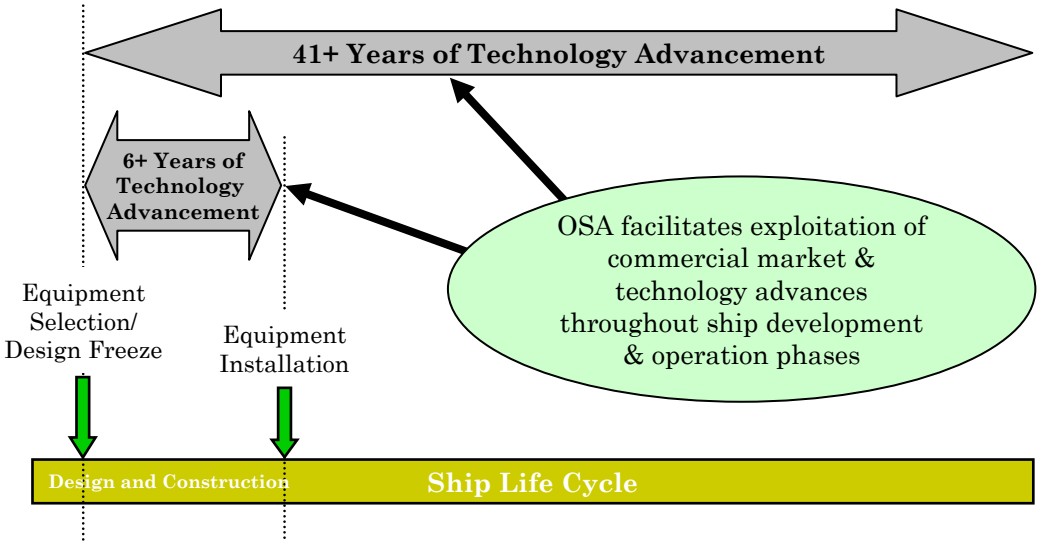

- Increased market "exposure" & small market strength
- Increased emphasis on **Technology Refresh** & **Insertion**
  - Response to COTS / Market changes
  - Response to Mission changes
  - Response to New Technologies (evolutionary and disruptive)

OSA is a large component of the answer

Choosing a Sensor-Bus Standard

- **Multiplicity of Sensor-Bus Networks**
  - Market surveillance showed over 80 Sensor-Bus “standards” in use by industry
  - No one Sensor-Bus network standard has market dominance
  - Little or not interoperability between standards

- **Navy Unique Requirements**
  - Trying to choose a Sensor-Bus network that will be adaptable & flexible and will be able to grow over the course of a life of a ship class (30+ years)
  - Ability to have a feature-rich standard, yet is easy to use by system designers, implementers & maintainers

- **Use COTS standards as much as possible**
  - Navy does not drive standards market
  - Use what industry has developed for better interoperability, flexibility, competition and longevity

Navy's Smart Sensor Risk Mitigation Efforts

- Adopting open architectures can be costly if they are not proven
- Smart Sensor Risk Mitigation Programs:
  - SmartShip Program
    - Transitions commercial technology to fleet
    - Perform fleet oriented tests of technology
    - Work for acceptance of technology by the fleet
  - Supply, Monitoring & Maintenance Open Architecture (SMMOA)
    - Streamlined online monitoring, Condition Based Maintenance, and supply/logistics
    - Strive for Open Architecture concepts
    - Test new technologies
    - Promulgate within acquisition programs
    - Work for integration by shipyards

SmartShip Model Risk Mitigation

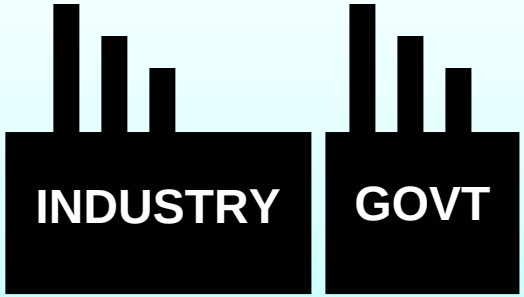

ATD
ACTD
PLUS - UPS
SBIR PROJECTS

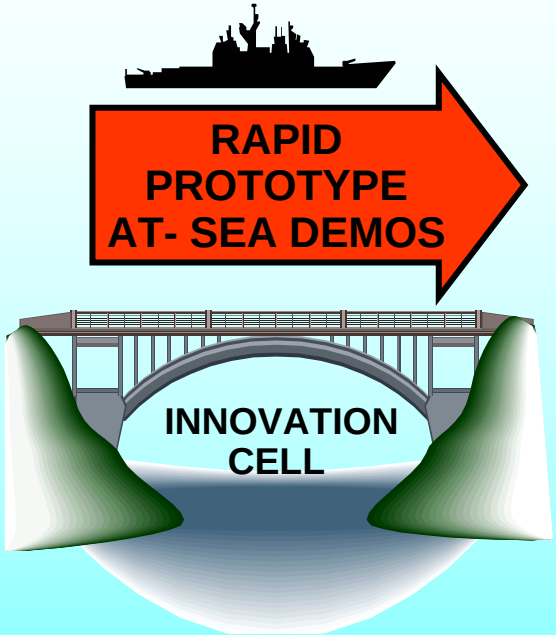

TECHNOLOGY LANDING ZONE PROGRAMS OF RECORD

RISK MITIGATION

COST AVOIDANCE
ACCELERATE TECHNOLOGY TO FLEET

BASIC RESEARCH	APPLIED RESEARCH	ADVANCED TECHNOLOGY DEVELOPMENT	DEMONSTRATE & VALIDATE	ENGINEERING & MANAGEMENT DEVELOPMENT	PRODUCTION	FLEET SUPPORT
6.1	6.2	6.3	6.4	6.5		

SmartShip Technology Transition

RAPID PROTOTYPE AT- SEA DEMONSTRATIONS

TRANSITIONING COMMERCIAL TECHNOLOGY FOR REDUCED MANNING

PERFORMANCE SPEC

DDG NEW CONSTRUCTION

LCS - DD(X) - CG(X)

DDG MODERNIZATION

CRUISER CONVERSION

FFG MODERNIZATION

LPD 17 & OTHER PROGRAMS OF RECORD

Total Ship Monitoring System

Total Ship Monitoring Concept

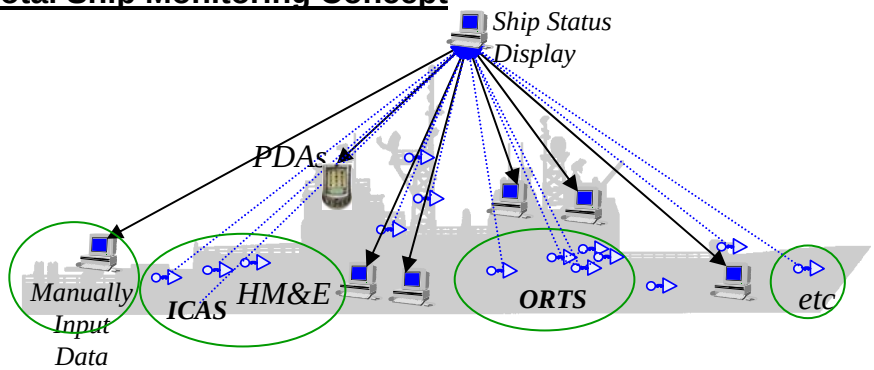

Integrated Shipboard Information Monitoring, Collection, Distribution, and Exploitation

Need

- Advance CBM capability required for optimal manning

Approach

- Automate collection of ship system data and information
- Perform diagnostics and prognostics
- Provide ship-level display of ship systems status
- Use wireless technology as key enabler and cost saver

Functional Overview

- Wireless LAN extension of UNCLASS ISNS LAN
- Use existing and added sensors to monitor ship systems
- Transmit data and information wirelessly - NCAP
- Perform diagnostic and prognostic analyses – turn data into information
- Provide display of ship health status
- Utilize and integrate with existing maintenance information systems – ICAS, ORTS

Benefits

- Reduce maintenance burden
- Enable CBM
- Wireless approach saves $$
- Reduce required manpower
- Improve ship operational readiness
- Improve awareness of ship mechanical health
- Improve environmental performance – enabling increased use of digital information = reduced paper waste

Supply, Maintenance and Monitoring Open Architecture

- Increased **operational readiness** – particularly when optimal manning is specified (e.g. DDX).

- Use **Open Standards** for better **Interoperability and technology upgrade & refresh**.

- **Optimal efficiency for shipboard maintenance and supply functions**
  - Real-time Condition assessment
  - Condition-Based maintenance
  - Automation of supply functions
    - Inventory and Parts ordering and tracking

- **Solutions must be acceptable**
  - For both system integrators and component manufacturers
  - For new ships and be compatible with on going programs

SMMOA Vision

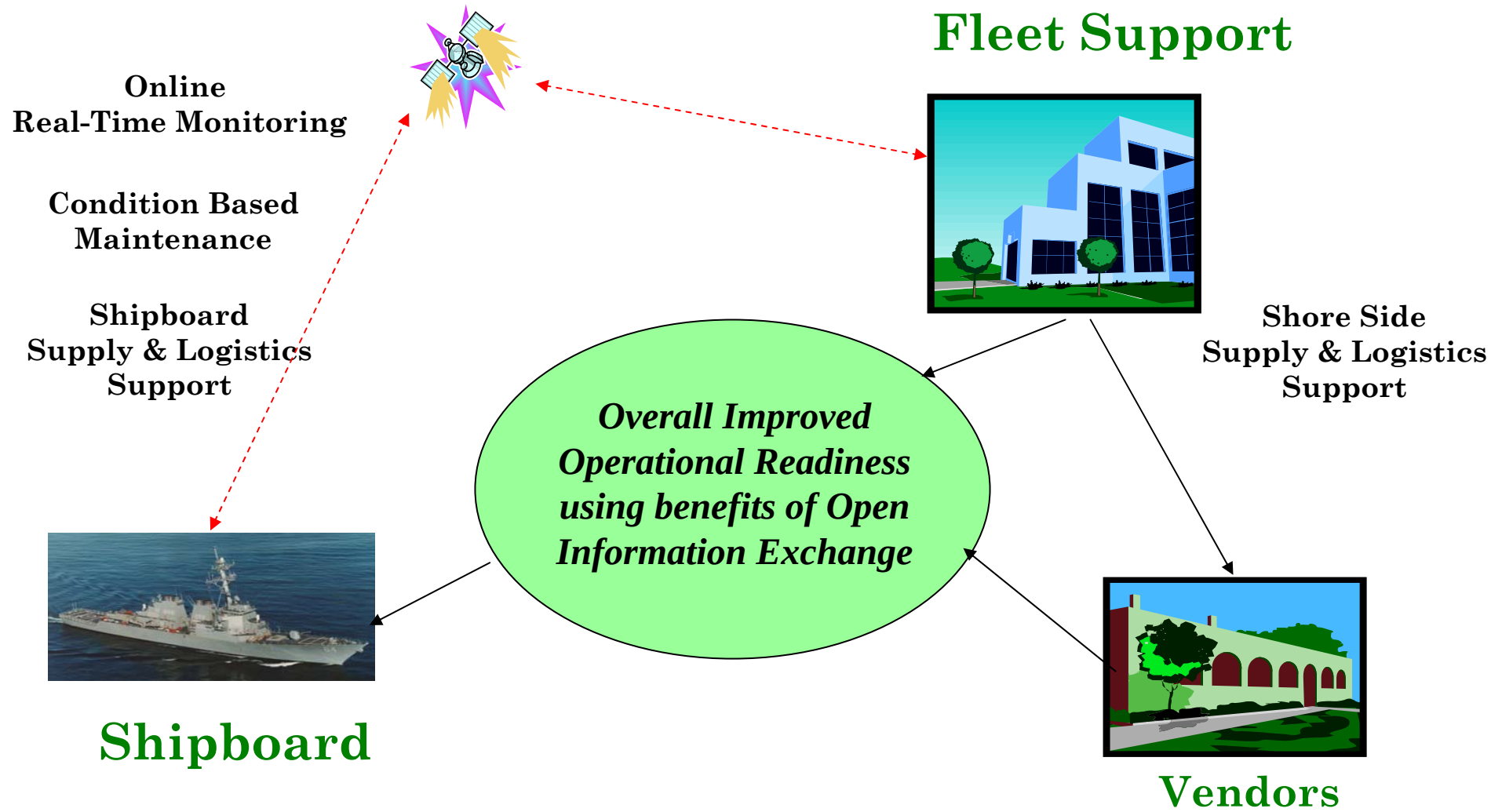

Distributed Sensor-bus Network

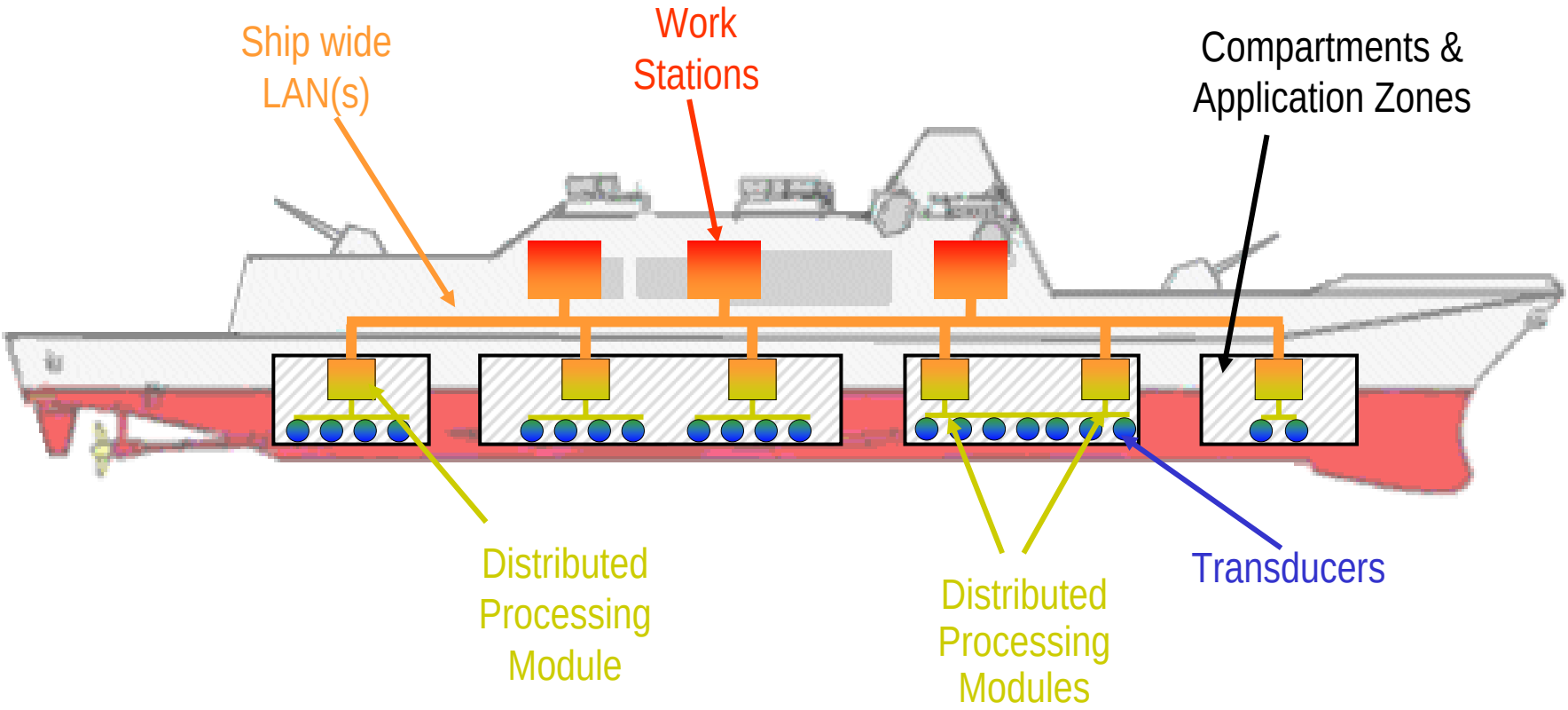

Modular Sensor-bus Interfaces

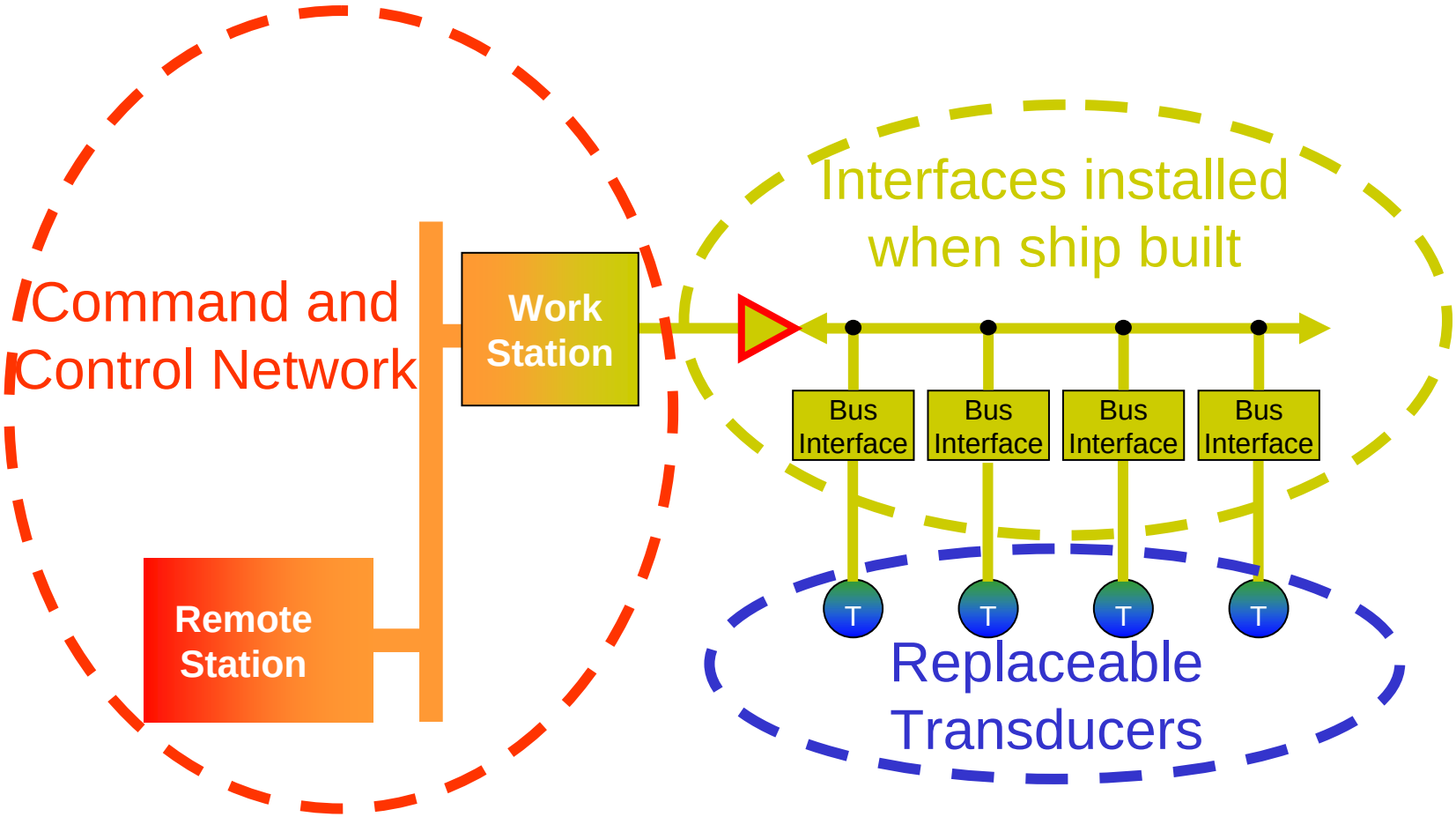

SMMOA's and the IEEE 1451 Family

SMMOA's focus on the IEEE 1451 family:

- The IEEE 1451 sensor-bus network family attempts to address interoperability issues
- **1451 family allows for interoperability among different network AND transducer manufacturers**
- 1451 family allows for plug & play of transducers *and* network
- 1451 family allows for easy upgrade
- Development of the 1451 family is evolving

SMMOA chose to focus on IEEE 1451 as a candidate Navy *open interface* sensor/network standard

Early Risk Mitigation & Demonstration

- **Development of an Open Sensor/Network Interface (OSNI) Demonstrator**
  - IEEE 1451.3 (multi-drop bus) chosen for testing
    - Used an early draft of the standard (circa 2001)
  - Examine and explore Navy needs and requirements
    - Tested a concept of additional backup features added to help address Navy specific issues
    - Help demonstrate the use of plug-and-play for sensor-bus networks
  - Adapted existing COTS parts and systems to simulate IEEE 1451.3 network
    - Pressure & Temperature sensors
    - Encoder & Stepper motor actuators

Original 1451 Demonstrator IEEE 1451.3 Configuration

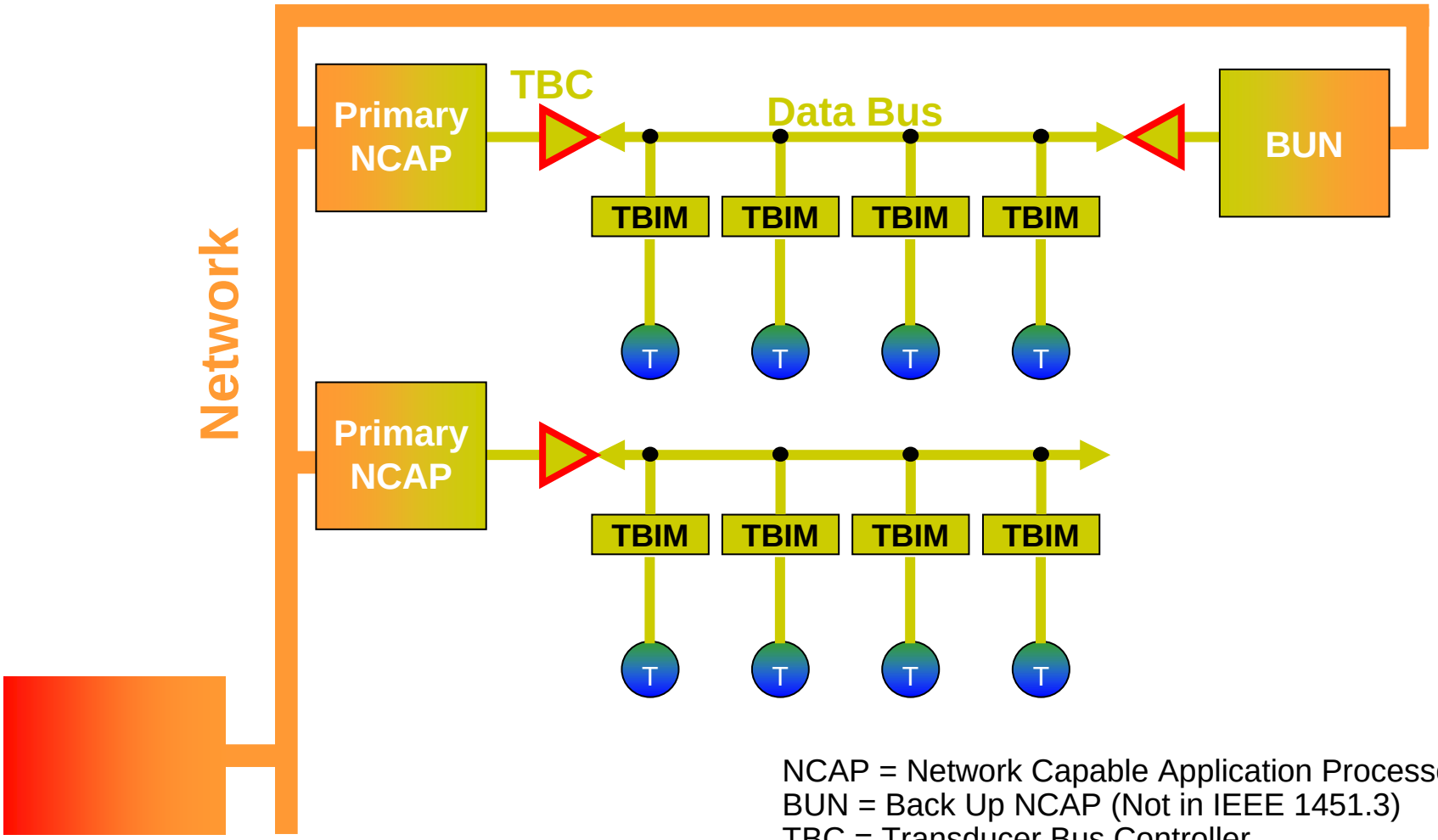

NCAP = Network Capable Application Processor
BUN = Back Up NCAP (Not in IEEE 1451.3)
TBC = Transducer Bus Controller
TBIM = Transducer Bus Interface Module
T = Smart Transducer/Actuator

Original 1451.3 Demonstrator (Volution, Inc. - San Diego, CA)

Use of Open Sensors Technology on DD(X)

- **New Navy destroyer class – DD(X)**
  - Reduced Manning requirements, leads to Automation
- Designed and built by Northrop Grumman Ship Systems (Ingalls Shipbuilding – Pascagoula, MS)
- **MRSS – Mission Readiness Support System**
  - Enhanced Operational Readiness utilizing Condition Based Monitoring
  - Exploring the use of open standards such as IEEE 1451 & MIMOSA

MRSS Architecture and Standards

Critical interfaces:

- TSCEI Interface
- Equipment Interface

Common database:

- Can be resident in whole or in part at any level

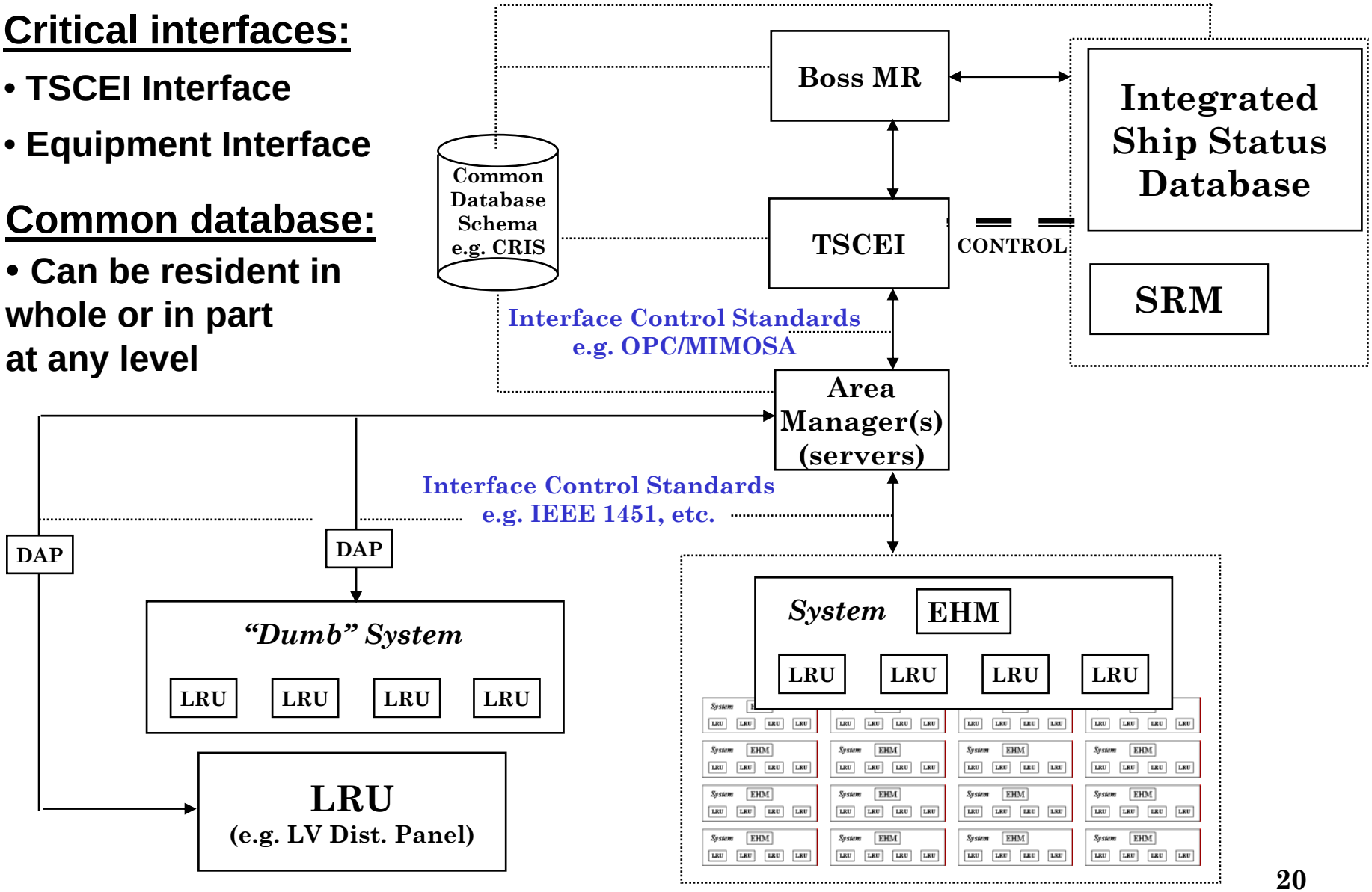

Other New Ship Classes

- **Littoral Combat Ship (LCS)**
  - Small, fast ship for use near shorelines
  - Modular ship design (Mission modules)
  - Adaptable & flexible mission capabilities
  - Like DD(X), also has reduced manning requirements which requires a highly automated system design

- **Dual Independent Design Teams**
  - Bath Iron Works (General Dynamics)
  - Lockheed Martin

Littoral Combat Ship (LCS)

Modular Design and Open System Architectures

- Technology Insertion
- Mission Change
- Interoperability

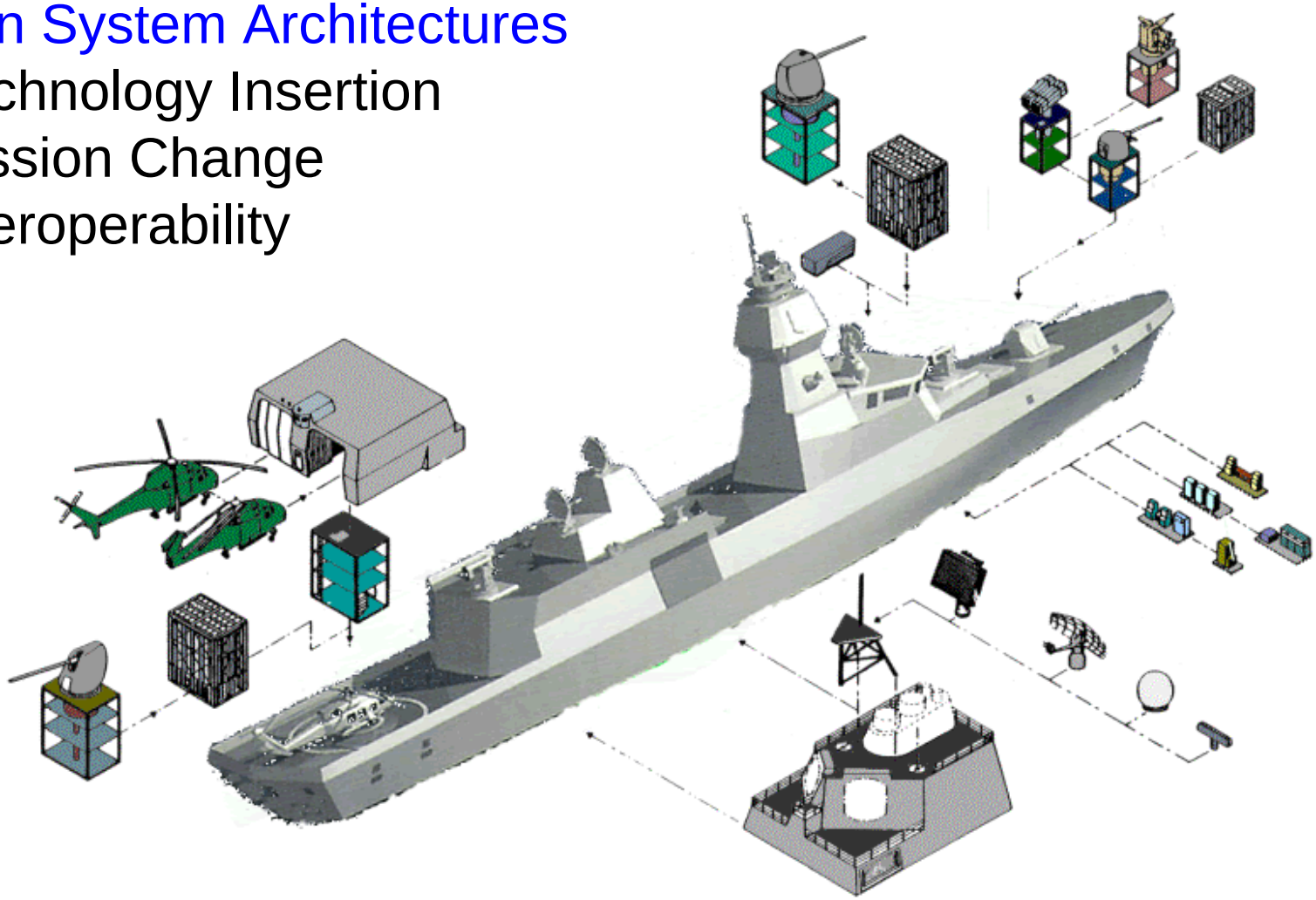

Open HVAC Sensor/Bus Prototype Project

- **Automated management of HVAC system for Combat Information Center on a Navy cruiser (CG-47 class)**
  - Monitor and control HVAC system for radar room aboard a Navy cruiser (CG-47 class)
  - Showcase the benefits of IEEE 1451.3 multi-drop sensor standard
  - Joint venture – Hyperfine/Moore Industries, Telemonitor, Tarallax, & NGSS
  - Expected Timeframe: July - December 2004
  - Provides direct benefits to the fleet
  - Existing system will be left in place
  - Digital thermostats to replace existing analog units
  - Combination temperature/humidity/dew point sensors
  - Controls chilled water and reheat system
  - Also monitor power load for equipment that may affect temperature within space and provide proactive controls to minimize temperature differentials within the space and equipment

Net Concentrator (NCAP)

<u>Net Concentrator</u> by Moore Industries

Used to perform I/O from IEEE 1451 side to Ethernet Network

Information – not data

Industrial Grade equipment

Good for shipboard integration

Developmental TBIM

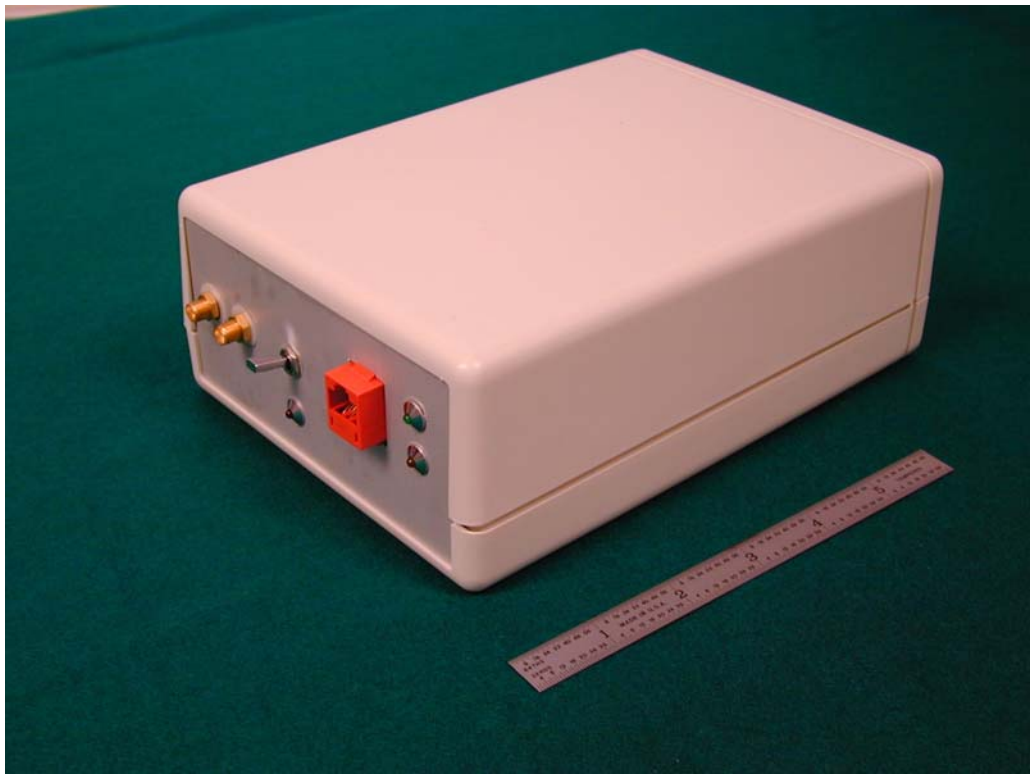

<u>Transducer Bus Interface Module</u> by Tarallax Wireless
Developed in coordination with
Oak Ridge National Laboratory
& Boeing Commercial Airplanes

Open HVAC Prototype Implementation

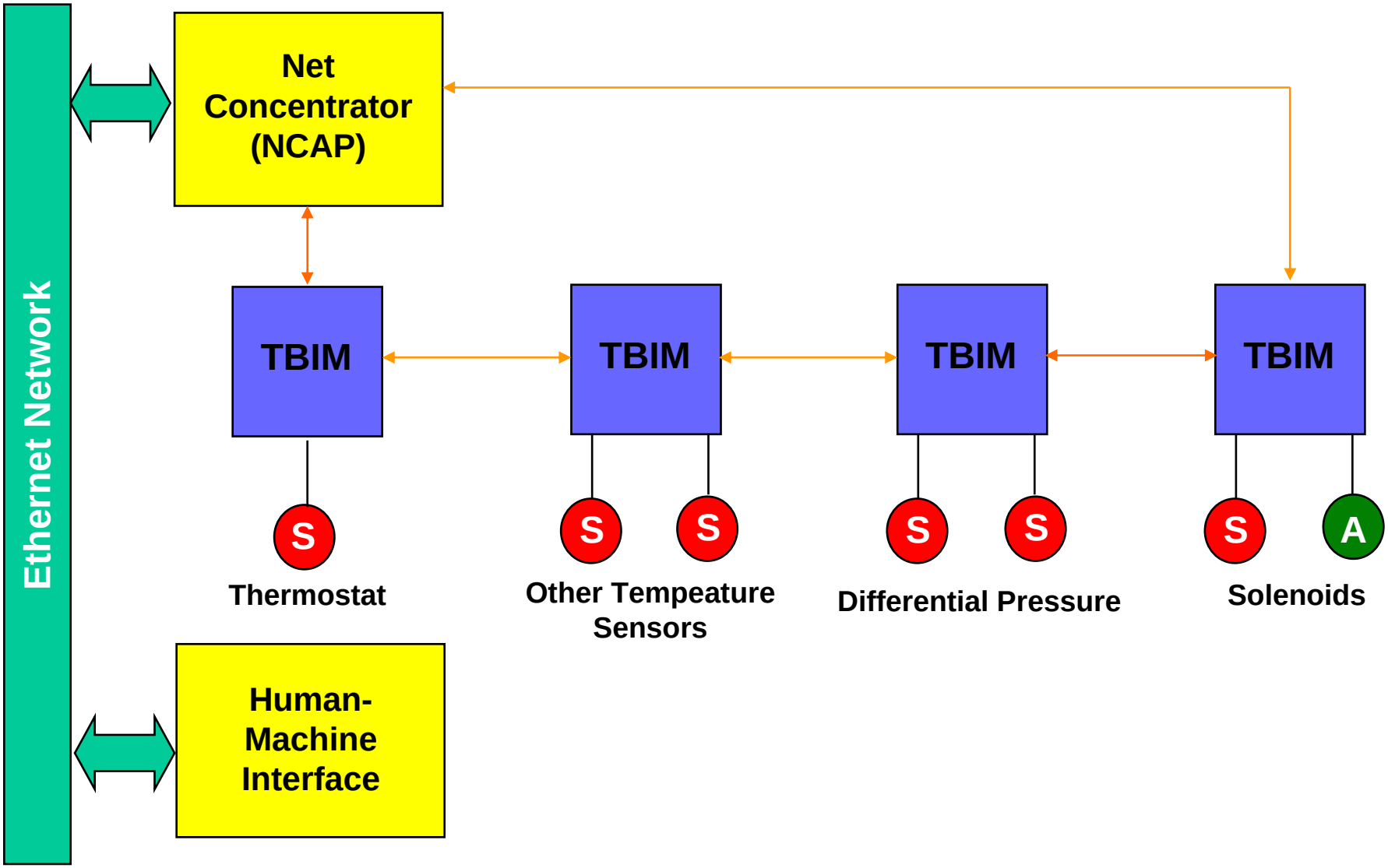

Small Business Innovative Research

- **Smartship/SMMOA sponsored SBIRs**
  - Next Generation NCAP – Phase I is underway
  - Performed by the following companies:
    - 3eTI
    - Fairmount Automation
    - Luna Innovations
    - Physical Optics Corp.

  - Fault Tolerance in IEEE 1451.2 networks – Phase II
  - Performed by MPI Software/Verari Systems

  - Electromagnetic Pulse Protection in IEEE 1451.3 networks – Phase I just got underway in May 2004

Conclusion

- **Open Sensor Standards are a Prime Concern for Navy's future**
  - Future manning requires better use of technology for monitoring and control
  - Open Standards should be developed/used for interfaces
  - Shipboard Risk Mitigation is needed
    - Open HVAC Prototype Project
  - Transition technologies to the fleet
    - Current fleet through backfit where appropriate
    - Future fleet through transition to acquisition programs
      - DDX, LCS, CVN21, etc.

Contact Information

- SMMOA Project Leader:

  David Perrussel

  perrusseldb@nswc.navy.mil

  (540) 653-6820

- Smartship S&T Team:

  Lance Flitter

  flitterla@nswccd.navy.mil

  (301) 227-3161

Backup

1451.4 Compliant I/O Node

SmartShip funded development of Wireless I/O Node

- Designed for process control, industrial automation, and data I/O
- Can performs remote monitoring and control via web, wireless, modem, or Ethernet
- Built-in data server provides and easy and friendly user interface.
- Wirelessly communicates in the license-free 2.4 Ghz IAS communication band: reduces cable installation time and cost.

- **Implements IEEE 1451.4**
  - **Utilizes TEDS**
  - **Integrated NCAP / STIM**
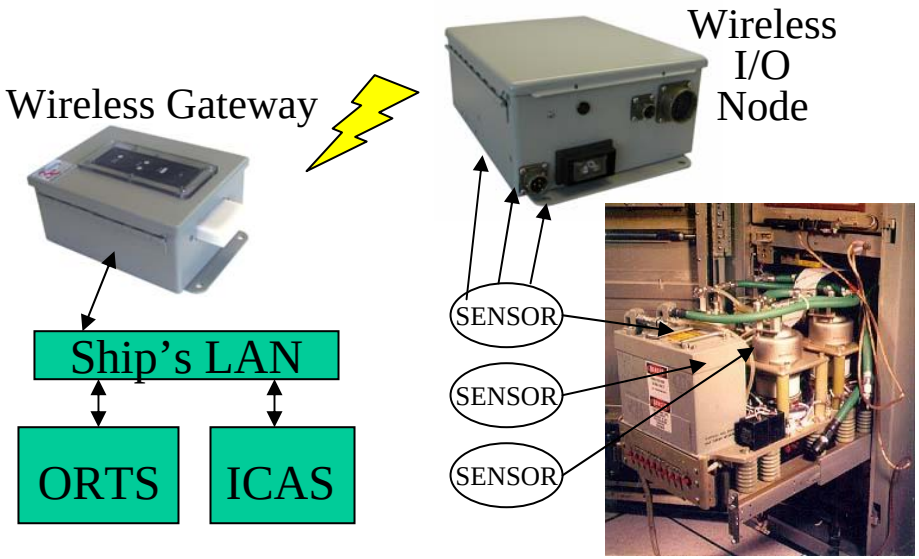
Application Example