IEEE 1451.4
Standard for Mixed-Mode Smart Transducers
– *An Update and Overview*

Sensors Expo 2004

June 8, 2004

David Potter
National Instruments Corporation
david.potter@ni.com

Now Approved!

IEEE 1451.4

A SMART TRANSDUCER INTERFACE – Mixed-Mode Communication Protocols and Transducer Electronic Data Sheet (TEDS) Formats

- Objectives of 1451.4
  - Enable plug and play at the transducer level
  - Enable and simplify creation of smart transducers
  - Simplify the setup and maintenance of instrumentation systems
  - High compatibility with legacy systems
  - Enable implementation with minimal memory requirement
- Based on industry practices
- Leverages commercially available technology

What is the Context of of IEEE 1451.4?

Generalized Smart Sensor Model

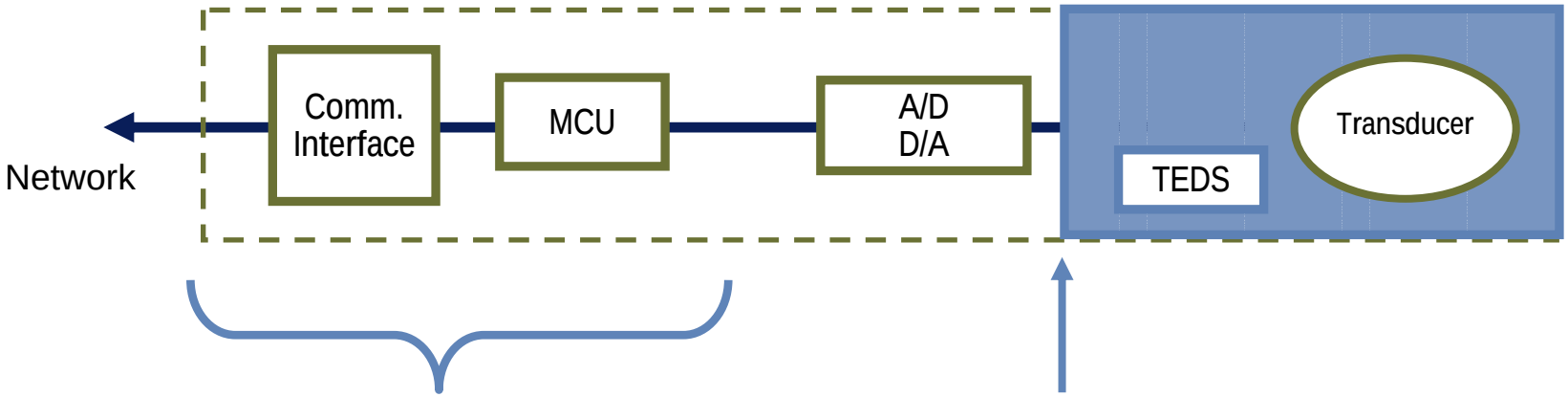

IEEE 1451.2
IEEE 1451.3
IEEE 1451.5
Other Smart Sensor Interfaces…

IEEE 1451.4

IEEE 1451.4 Standard for Plug and Play Sensors

Plug and Play Sensor

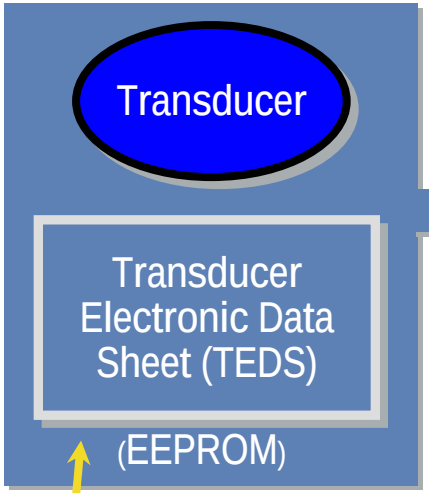

Analog Signal

Voltage
Resistance
Bridge
Etc.

Digital (TEDS)

0001010111110101
01010010100…

Mixed-Mode Interface
- Method of combining analog and digital (Class 1 or Class 2)
- Digital protocol/commands

TEDS
- Set of standard templates
- Description language for TEDS templates

- *Sensor manufacturer*
- *Model number*
- *Serial number*
- *Measurement range*
- *Transfer function*
- *Calibration info*
- *User Info*
- *And more …*

NATIONAL INSTRUMENTS

IEEE 1451.4 – Mixed-Mode Interface

- Two Classes of Hardware Interfaces

Class 1 Sensor Interface

- Shared wires
- Sequential access of analog and digital TEDS
- Used primarily on constant-current powered IEPE (ICP®, Piezotron®, Isotron®, DeltaTron®) sensors (accelerometers, microphones, etc.)

Class 2 Sensor Interface

- Separate wires
- Parallel access of analog and digital TEDS
- Can be applied to virtually any sensor type

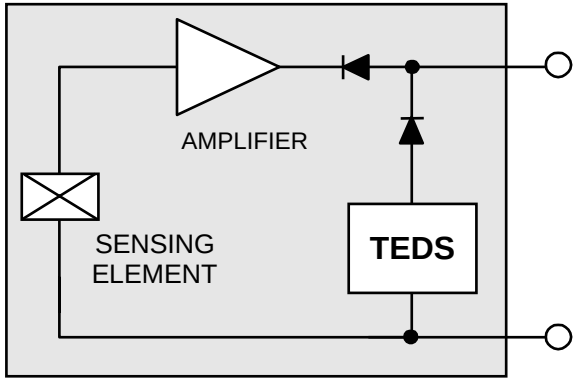

Class 2 Example: Bridge Output Sensor

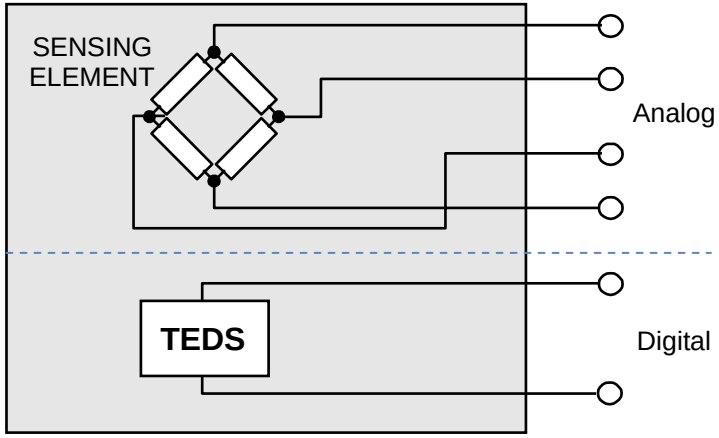

TEDS EEPROM and Digital Protocol

- Simple 2-wire interface
  - Bidirectional, single-master, multi-drop
- Slaves (EEPROMs) scavenge power from 5V signal line
- 64-bit unique address/ID in every device
- Based on commercially available technology (parts available now)
  - 1-Wire™ protocol from Maxim/Dallas Semiconductor (www.dalsemi.com)
  - Example parts: DS2430: 256 bits

    DS2433: 4,096 bits

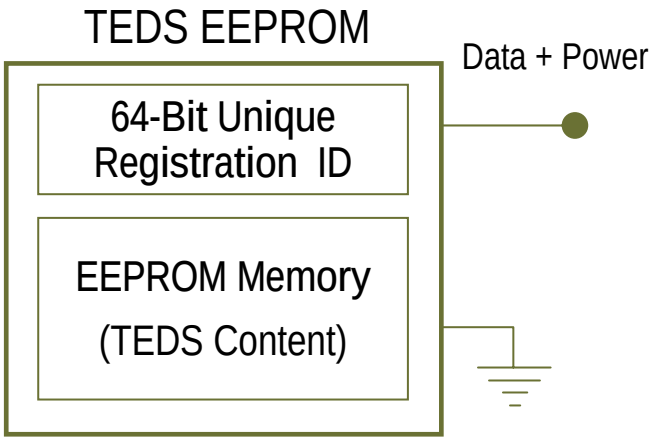

TEDS Data Structure (Simplified)

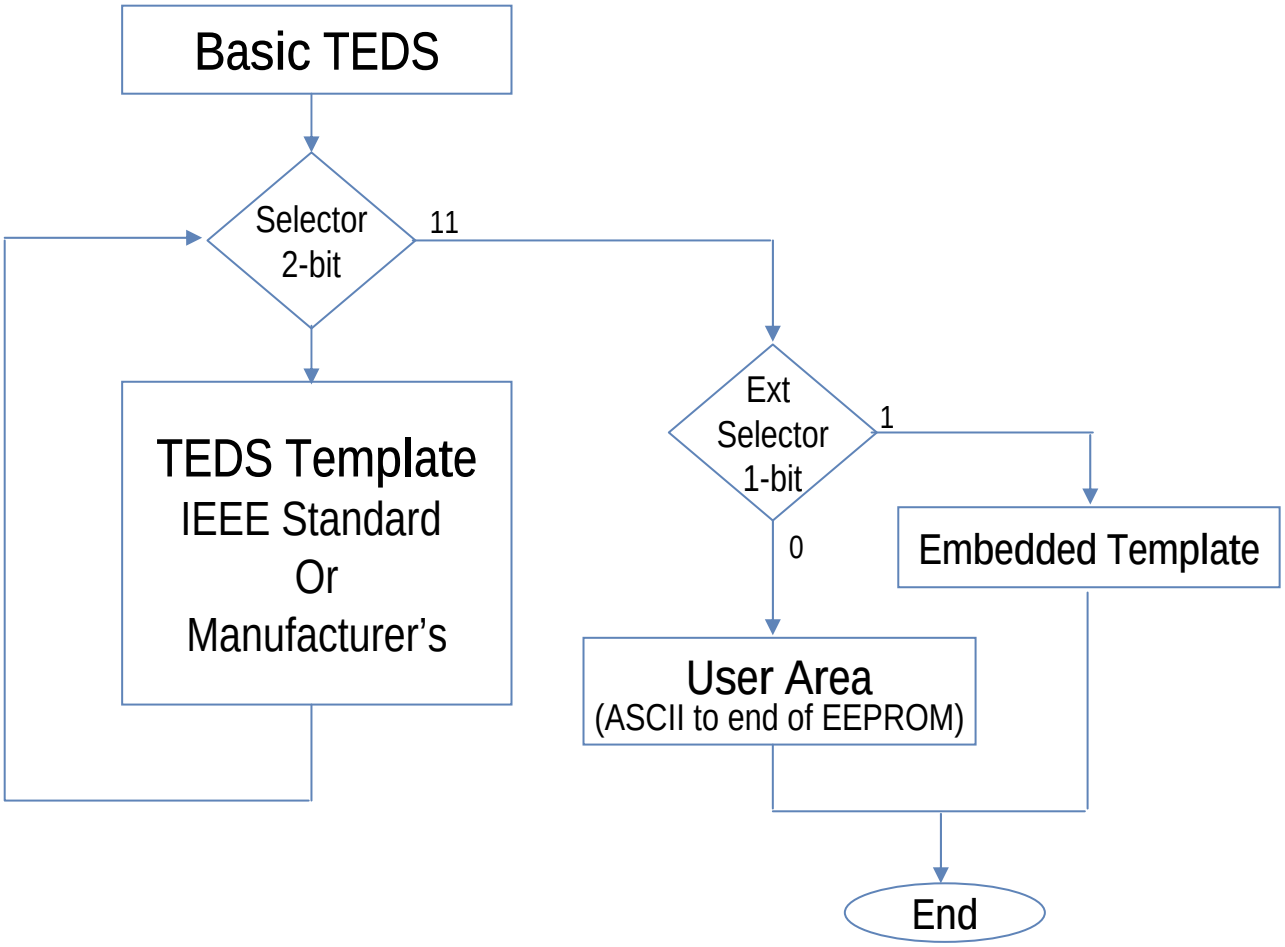

Basic TEDS

- Uniquely identifies transducer
- Minimal requirement for IEEE 1451.4 transducer
- 64 bits

Manufacturer ID (administered by IEEE RA)	14 bits
Model Number	15 bits
Version Letter	5 bits char
Version Number	6 bits
Serial Number	24 bits

TEDS Templates

- Define mapping of TEDS data bits for different sensor types
- Enables very efficient compression of TEDS data
- Flexible to handle new/specialty TEDS requirements
- Standard includes collection for popular transducers, written in template description language (TDL)

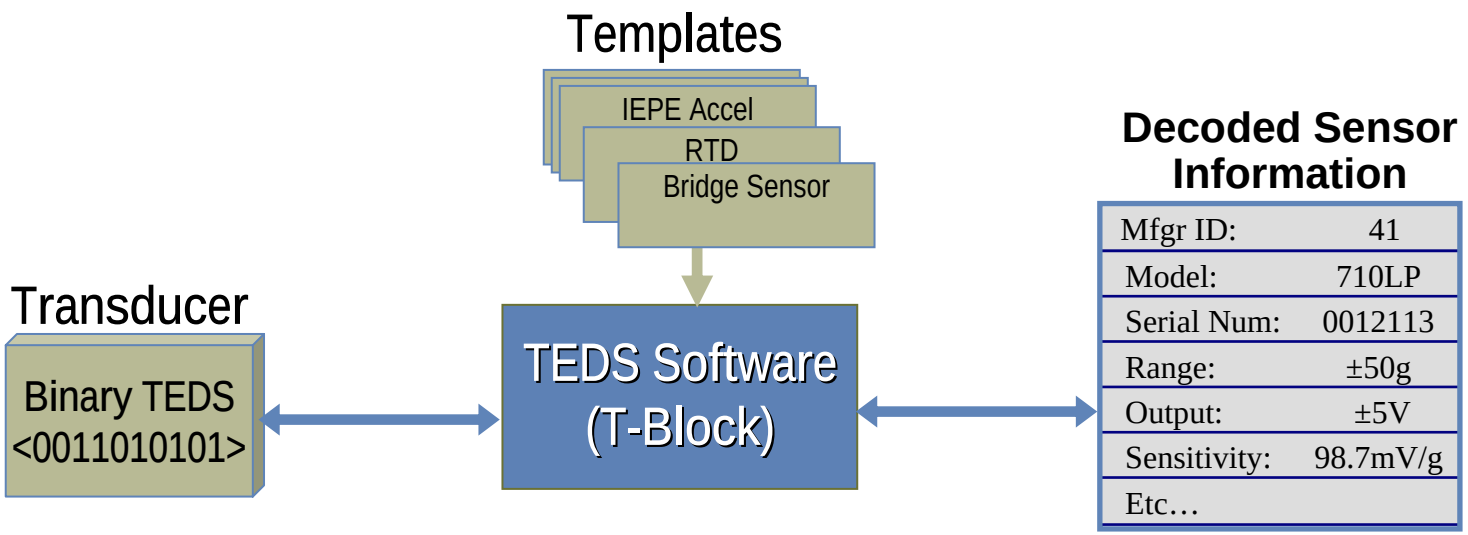

IEEE Standard Templates

Type	Template ID	Name of Template
Transducer Type Templates	25	Accelerometer & Force
	26	Charge Amplifier (w/ attached accelerometer)
	43	Charge Amplifier (w/ attached force transducer)
	27	Microphone with built-in preamplifier
	28	Microphone Preamplfiers (w/ attached microphone)
	29	Microphones (capacitive)
	30	High-Level Voltage Output Sensors
	31	Current Loop Output Sensors
	32	Resistance Sensors
	33	Bridge Sensors
	34	AC Linear/Rotary Variable Differential Transformer (LVDT/RVDT) Sensors
	35	Strain Gauge
	36	Thermocouple
	37	Resistance Temperature Detectors (RTDs)
	38	Thermistor
	39	Potentiometric Voltage Divider
Calibration Templates	40	Calibration Table
	41	Calibration Curve (Polynomial)
	42	Frequency Response Table

IEEE 1451.4 System Capabilities

- Tier 1 system: can access data in Basic TEDS
- Tier 2 system: standard TEDS data access (templates)
- Tier 3 system: can additionally handle transducers with:
  - Extended Functionality
    - Can use digital communications to control transducer configuration:
    - Self-test, reset
    - Adjust or set gain, offset, or filter settings in transducer
    - Multiplexing of analog output (analog multidrop)
  - Mulitnode configurations
    - More than one digital device (EEPROMs, etc.) on MMI

- Appended (or Virtual) TEDS
  - Sensor TEDS can include a pointer to “external” TEDS data
  - TEDS data can exist in Virtual TEDS file for sensor without EEPROM or MMI

NATIONAL INSTRUMENTS

IEEE 1451.4 - Smart Mixed-Mode Transducers

- More Information

david.potter@ni.com	David Potter, working group vice-chair
TRLICHT@bksv.com	Torben Licht, working group chair
kang.lee@nist.gov	Kang Lee, NIST

NATIONAL INSTRUMENTS