An Overview of Revisions to IEEE 1451.2-1997

by

James Wiczer, PhD

Sensor Synergy

Sensor Synergy, Inc.
1110 Lake Cook Rd., Buffalo Grove, IL
847-353-8200
www.sensorsynergy.com

SENSOR SYNERGY

Sensors Expo 2004

Detroit, MI June 8, 2004

The 1451.2-1997 Standard- Some History

- From 1994 to 1997 IEEE 1451.2 was Developed by Industry, Government, & Universities Coordinated by NIST & IEEE
- Approved in 1997
- Published in 1998
- Goal – Develop Network Neutral Approach to Interfacing Smart Sensor to Computer Networks
- Enable Emerging Smart Sensor Technologies to be Utilized and Thrive Despite Field Bus Wars

The 1451.2-1997 Standard-Lessons Learned from Early Implementations

- IEEE 1451.2 was the first of a family of Standards Developed to Accommodate Many Sensor Interface Needs in Industry, Government, & Universities

- Technologically Powerful Feature Set Include
  - TII – 10 Wire Transducer Independent Interface
  - Transducer Electronic Data Sheets
  - Piecewise, Multinomial Calibration and Correction Engine

Lessons Learned from Early Implementations

- While Accommodating Many Sensor Interface Needs in Industry, Government, & Universities, IEEE 1451.2 was filled with Sophisticated All-Encompassing Technology Solutions

- Technologically Powerful Feature Set Included
  - New Unsupported Technologies (10- Wire TII)
  - Technically Sophisticated Abstract Concepts (TEDS)
  - Complex Mathematically Constructs (Correction Engine)

Advantages of Using 1451.2 for Implementing Network Connected Sensor Solutions

- Using a Standard Focuses Your Efforts on the Known Technical Requirements to Implement a Solution
- Adhering to the Standard Encourages Implementations that are Known to Work Properly
- Following the Standard Provides Access to a Wide Range of Related Resources Developed and Used by Others

Revisions to IEEE –1451.2-1997 Address Issues from Implementers Experience

- Replace 10-Wire TII with Widely Used, Commonly Available, Highly Supported Electrical Interfaces -- UART & USB
- Simplify TEDS, Use Tagged Data Structures to Accommodate Optional Fields Instead Fixed Format Structures
- Provide Simplified Correction Engine

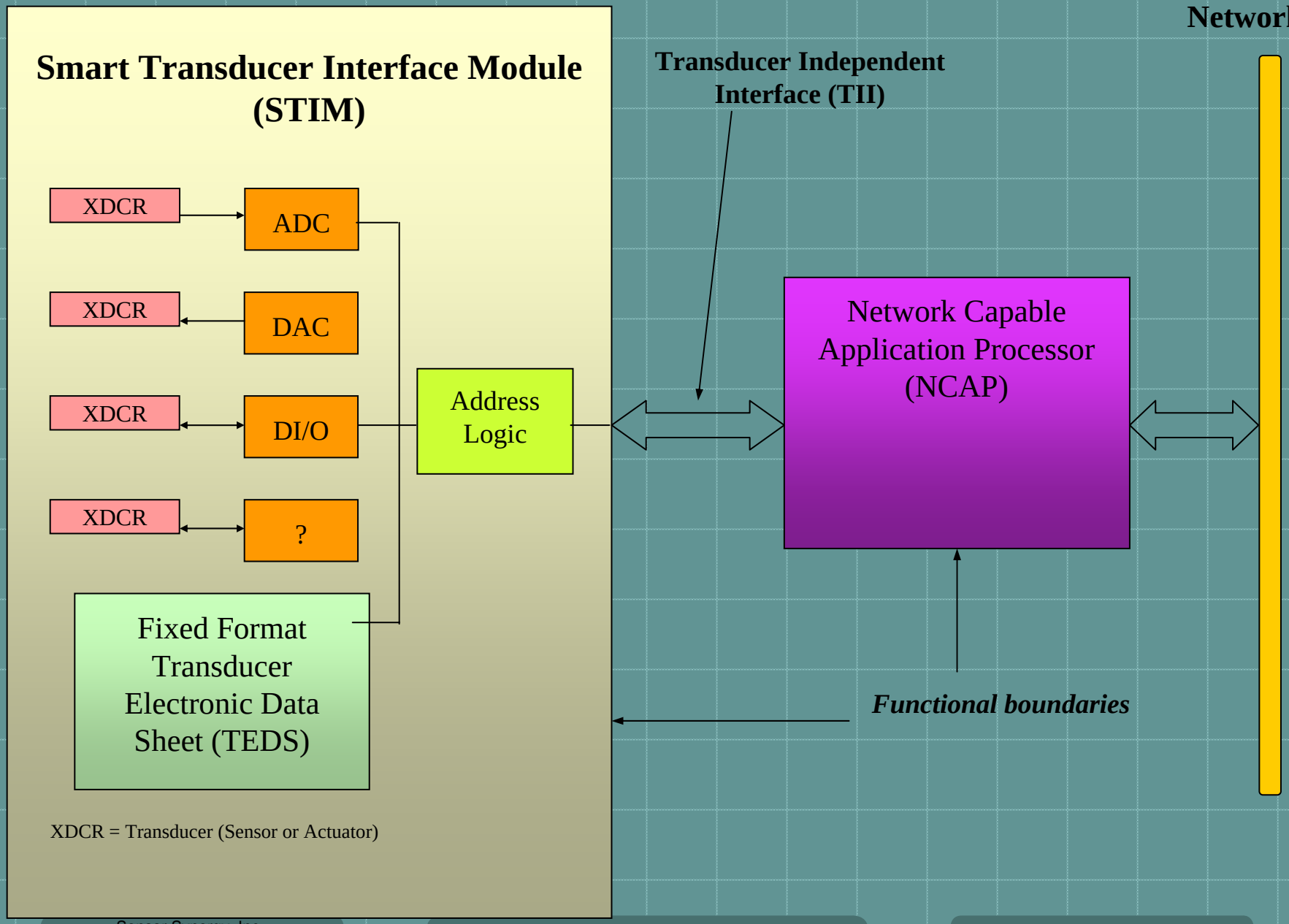
Smart Transducer Interface Module (STIM)
Network
Transducer Independent Interface (TII)
XDCR
ADC
XDCR
DAC
XDCR
DI/O
XDCR
?
Address Logic
Network Capable Application Processor (NCAP)
Fixed Format Transducer Electronic Data Sheet (TEDS)
Functional boundaries
XDCR = Transducer (Sensor or Actuator)

The physical lines of the transducer interface are described briefly in Table 52. Their complete behavior is specified in 6.3 through 6.5.

Table 52—Interface signal lines

Line	Logic	Driven by	Function
DIN	Positive logic	NCAP	Address and data transport from NCAP to STIM
DOUT	Positive logic	STIM	Data transport from STIM to NCAP
DCLK	Positive edge	NCAP	Positive-going edge latches data on both DIN and DOUT
NIOE	Active low	NCAP	Signals that the data transport is active and delimits data transport framing
NTRIG	Negative edge	NCAP	Performs triggering function
NACK	Negative edge	STIM	Serves two functions: —Trigger acknowledge —Data transport acknowledge
NINT	Negative edge	STIM	Used by the STIM to request service from the NCAP
NSDET	Active low	STIM	Used by the NCAP to detect the presence of a STIM
POWER	N/A	NCAP	Nominal 5 V power supply
COMMON	N/A	NCAP	Signal common or ground

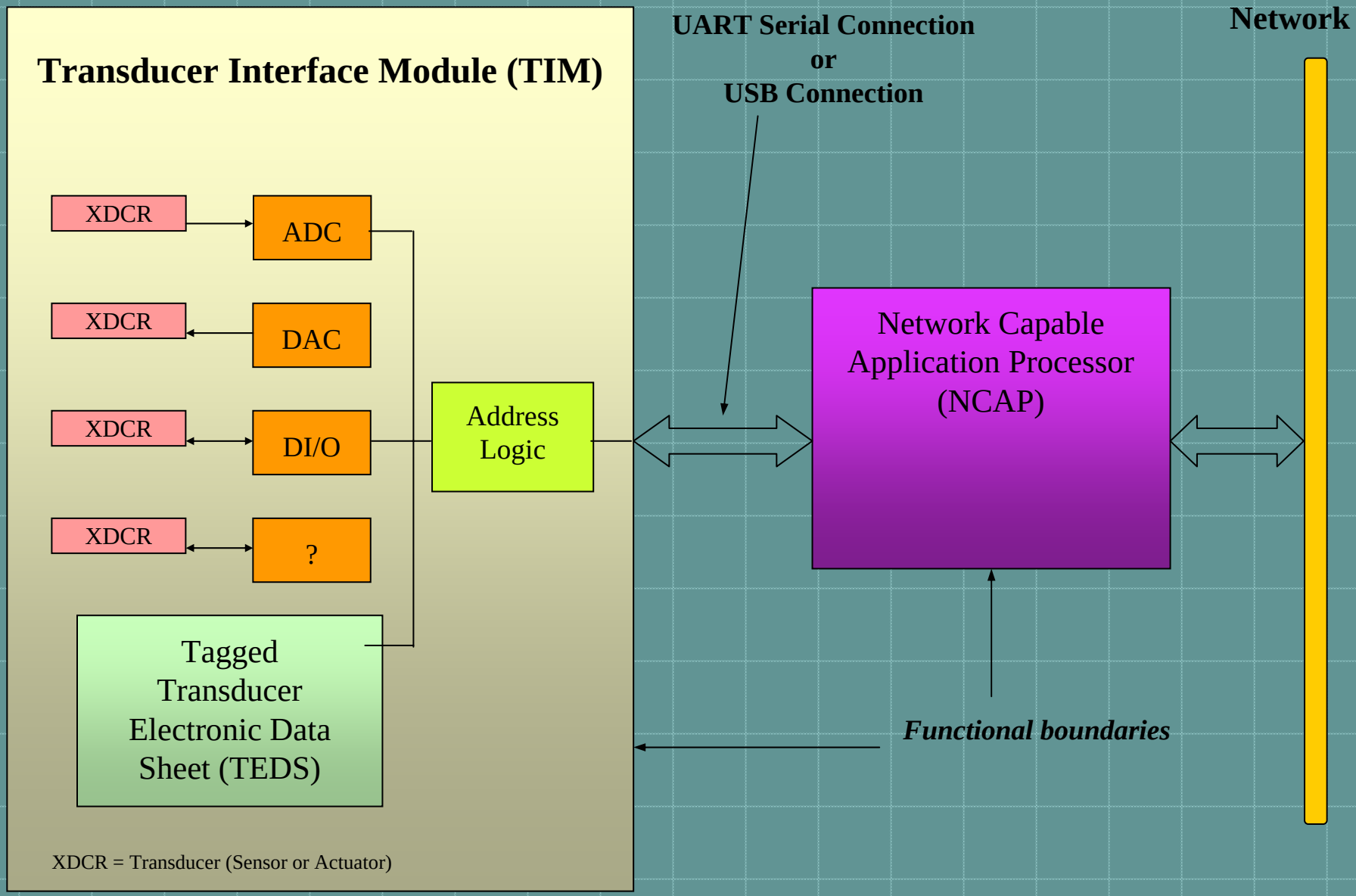
Transducer Interface Module (TIM)
UART Serial Connection
or
USB Connection
Network
XDCR
ADC
XDCR
DAC
XDCR
DI/O
XDCR
?
Address Logic
Network Capable Application Processor (NCAP)
Tagged Transducer Electronic Data Sheet (TEDS)
Functional boundaries
XDCR = Transducer (Sensor or Actuator)

UART Interface

- Supports Both RS-232 & RS-485
- RS-232 Interface Uses “PC” Standard Connector
- Variable Baud Rate Setting in Physical Layer TEDS to Accommodate Legacy Technologies and Newer Bluetooth Serial Connection
- Fixed “Start-Up” Parameters

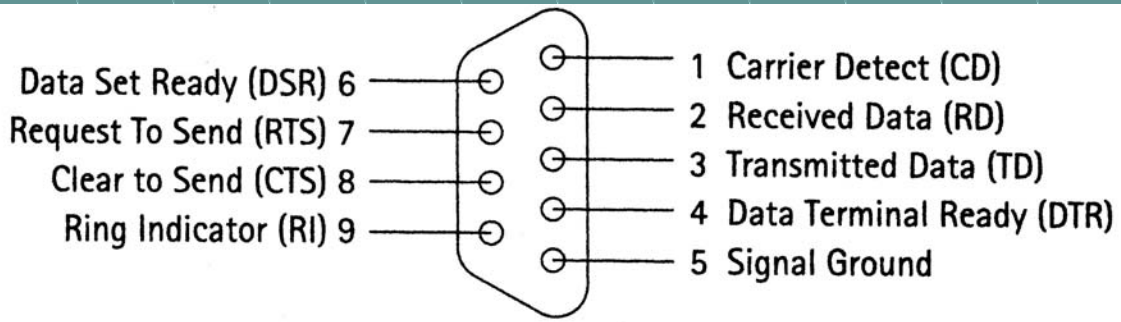

Commonly used RS-232 signals

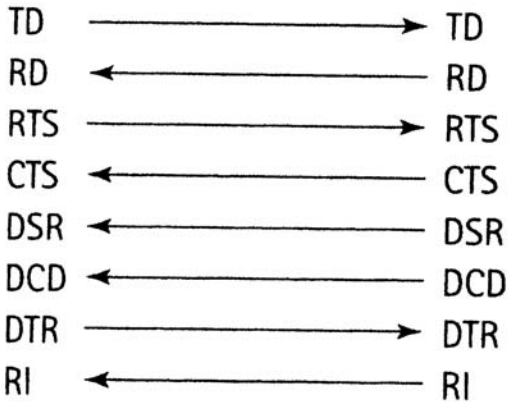

Direction of RS-232 Lines

USB Interface

- Universal Serial Bus Standard applied to the TIM to NCAP Interface
- Strict Adherence to the Existing USB Standard
- Supports USB 2 Data Transfer Rates
- Use of an HID USB Class for Interface Enable Existing Windows USB Drivers

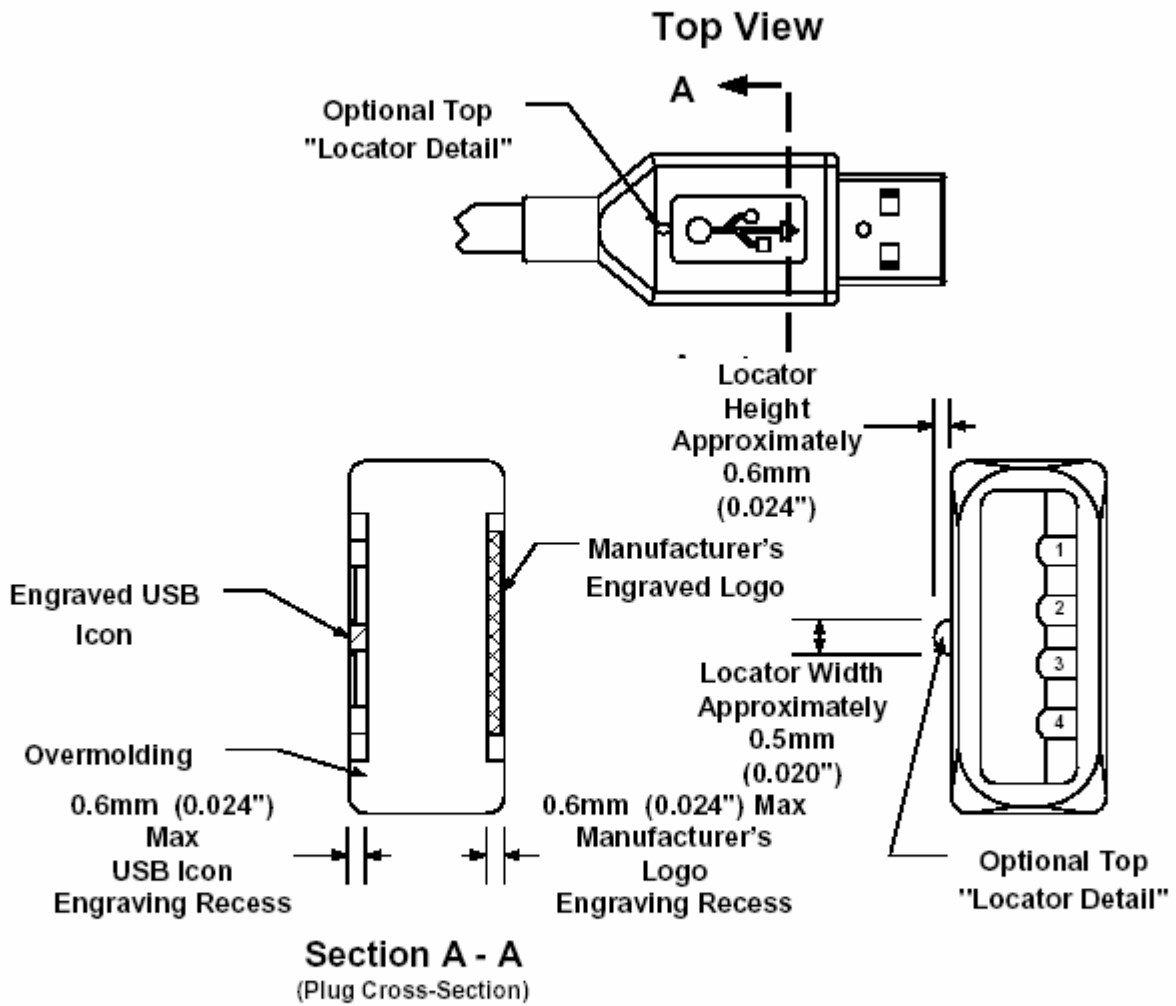

Figure 6-6. Typical USB Plug Orientation

le Edit Document Tools View Window Help
200%

6.5.2 USB Connector Termination Data

Table 6-1 provides the standardized contact terminating assignments by number and electrical value for Series “A” and Series “B” connectors.

Table 6-1. USB Connector Termination Assignment

Contact Number	Signal Name	Typical Wiring Assignment
1	VBUS	Red
2	D-	White
3	D+	Green
4	GND	Black
Shell	Shield	Drain Wire

6.5.3 Series “A” and Series “B” Receptacles

Electrical and mechanical interface configuration data for Series "A" and Series "B" receptacles are shown in Figure 6-7 and Figure 6-8. Also, refer to Figure 6-12, Figure 6-13, and Figure 6-14 at the end of this chapter for typical PCB receptacle layouts.

Tagged TEDS Structures

- Replace Fixed Format Structure with “Tagged” TEDS Structure
- Better Accommodates Optional Fields and Simplifies TEDS Implementations
- Eases Use of Optional Fields and Facilitates Upgrades
- Eliminate Physical Layer Related Fields from Meta-TEDS and Channel TEDS
- Create Physical Layer TEDS

Table Definition of the Type/Length/Value structure

Field	Description
Type	This code identifies the field in the TEDS that is contained within the value field. Except for types 3 and 2 the same number in the type field will have a different meaning in each different TEDS.
Length	The number in this field gives the number of octets in the value field. The number of octets in the length field is controlled by an entry in the TEDS Identification TLV.
Value	This field contains the TEDS information.

Allow for Simplified Correction/Calibration/ Compensation Engine

- Allow for Simple y = mX + B Type of Corrections in a Reduced TEDS Structure
- Continue to Allow for Complex, Piecewise Multinomial Correction Engine
- Focus on Simplified Implementations

Enhanced Use of Reference Implementations in the Annex

- Include Reference Implementations for RS-232, RS-485, and USB Solutions
- Demonstrate Hardware Solutions for Each Supported Interface Before Seeking IEEE Balloting