# Transducer Mark-up Language (TML)

03.07.2006

**Steve Havens**
**IRIS Corporation**

© 2004, Open Geospatial Consortium, Inc.

# Sensor Data Format Standards

SunRaster CCDF AVS SPLUS DVIX Quicktime TIGA SeaWiFS TGA
UNREAL VIVID AIFF XBM GRA MXF WAVE VGA TRI GMTI NITF
URT Nuclear Biological Chem AU Tachyon •Meteorological VEF Vision3D FW JCAMP
SMIL YASRT COB NUAGES •SWIR CUBE SCENE
GEM STANAG 5609 IR PDS MovieBYU YAODL
OpenDX VICAR ARCE Hyper Spectral q3o STANAG 4607
MS3D HTML RGB Video
FITS Multi Spectral 3DMI RVC Lightwave 5 x SURF

**INTEROPERABILITY? >> TOO MANY CHOICES**

**SENSOR DATA FUSION? >> NO NORMALIZATION**

SGML CGM SAR Video H.264 w/ KLV GEOM VLA PS ELINT
enff CD-1 DX90 ILDA LIDAR ARCG NSTF OFF WLD
Raster QPPEDR AL2 fld AAF 3DS ILDA FIG vol PLY DIF IGES RAW EDXML
RAD EPS RVF Commercial IKONOS BMP FLI JFIF MSLD
SDXF Minimal3d DXF RAY MPEG DBF •Audio AES-3 CFF SHP
GRIDLOCK Smart Image ADRG BSQ sdts DLG PDB
PI IRIT PPM ASC HIV OBJ VRML 3D2 cinema4D MI AVI CIF
IGDS OWL •Microsoft (.doc, .xls, .ppt) rsd JPEG StrataStudio XGA
Acoustic Seismic Mag GEO GRIB POVRAY
AC3D CSV IDEO ASCII nff GeoTIFF GRASS DirectX RIB PNG
OpenGL DTED EGDR IGES MDL SRTM LWOB PLT CXF PHD
TP Video MPEG-2 w/ KLV DGN DFAD CIF •MS WM9 Complex SAR ASE DMO TM
NDO QCIF DF3 TIFF ALC CDF SIF FFIVW DWG TGRLN SLC STP
VPF NSIF MGF CAP
TransXML M2MXML



© 2004, Open Geospatial Consortium, Inc.

# Notional High Level Architecture

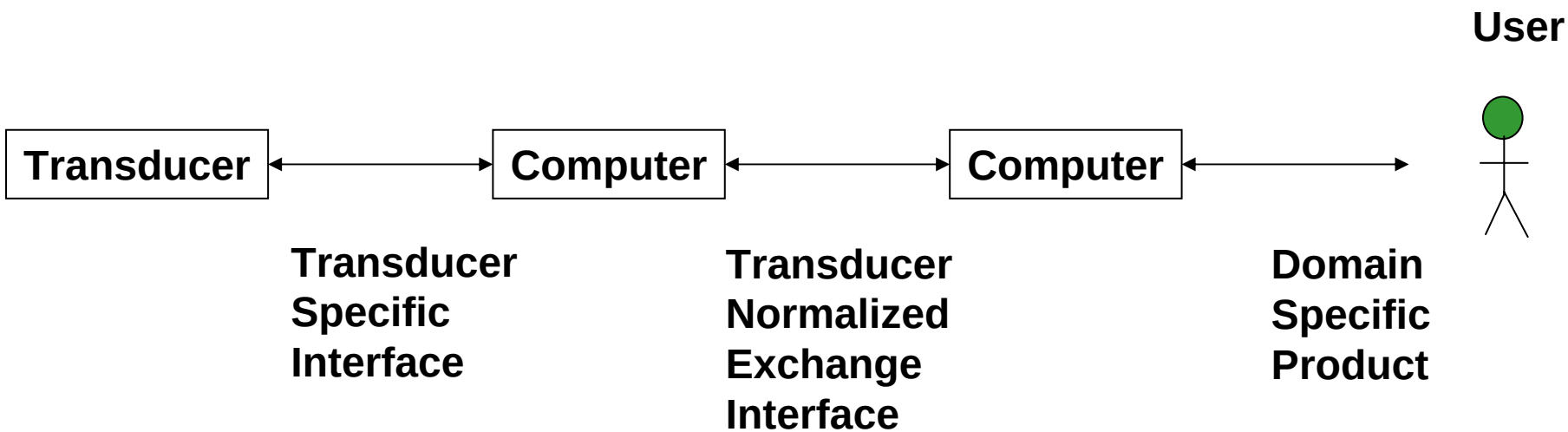



© 2004, Open Geospatial Consortium, Inc.

# Transducer Web

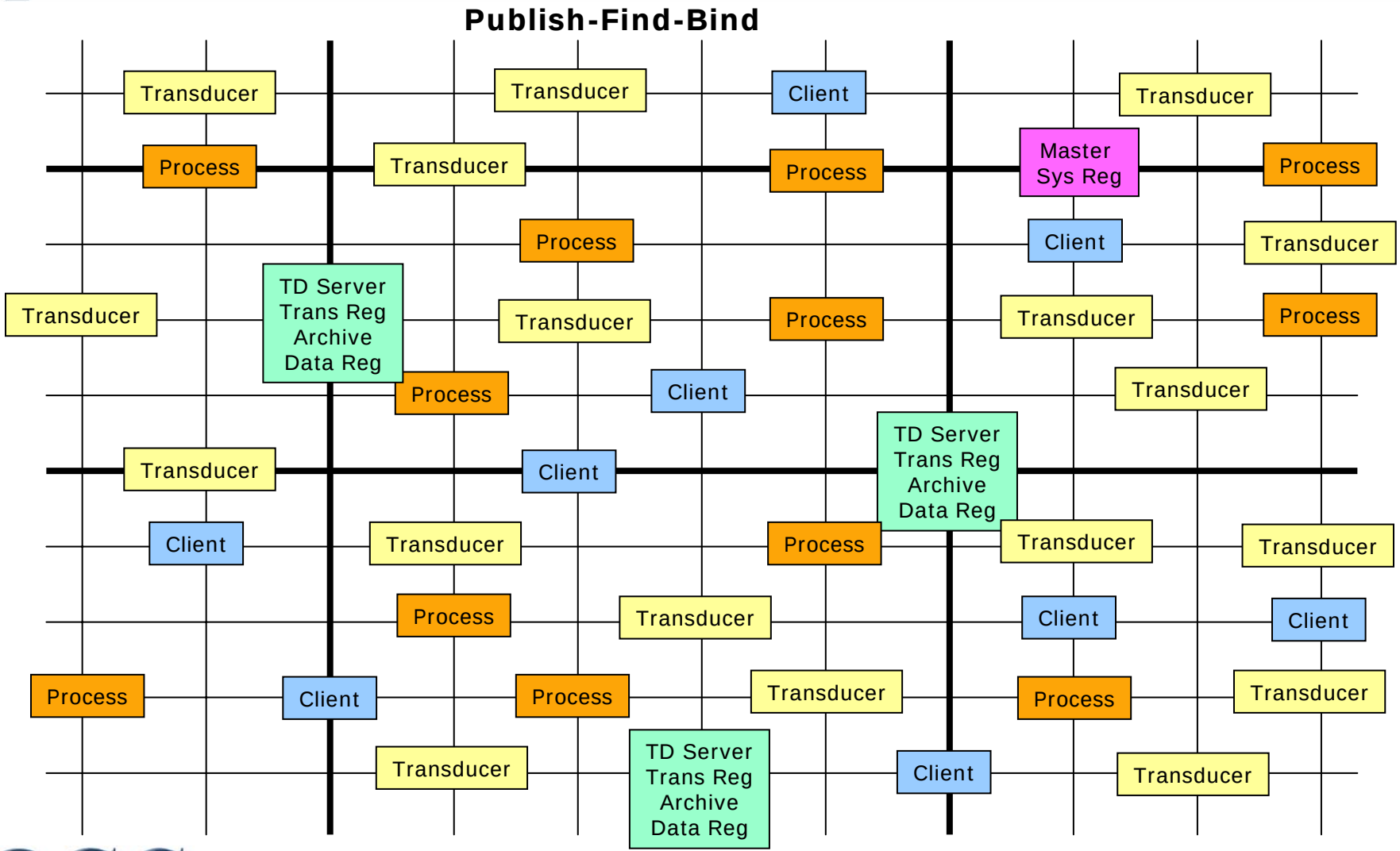




© 2004, Open Geospatial Consortium, Inc.

# Transducers (examples)

## In situ

- Pressure
- Temperature
- Humidity
- Flow
- Binary position
- Chemical
- Load cell
- Rotation speed
- Gas
- Optical
- Vacuum
- Ultrasonic
- Torque
- Oxygen
- Acceleration
- Radiation
- Rain
- Thickness
- displacement
- Navigation
- Tilt/level/inclination
- Photo detector
- Bio-sensors
- Magnetic
- motion
- Glass breakage
- Proximity
- pH sensors
- Resonant
- Yaw
- Moisture
- Linear positioning

## Remote

- Radar (real aperture, synthetic aperture, mono-static, bi-static, ISAR…)
- LIDAR
- FLIR/SLIR
- MSI/HSI
- Sonar
- Ultrasound
- MRI
- Camera (still/video/linescan…)
- COMINT
- SIGINT DF


© 2004, Open Geospatial Consortium, Inc.

# Scalable Solution

Transducers

Thermocouple

GPS/IMU

Camera

Linescan

Doppler Radar

SONAR

SAR

IFSAR

Complexity

## COMPLEXITY LEVEL

| File Size | Bandwidth \ Memory Req | <100 MB | 100 MB - 1 GB | 1 GB - 10 GB | 10 GB - 100 GB | >100GB |
|---|---|---|---|---|---|---|
| | RT FLOPS | <10 MFLOPS | 10 MFLOPS - 100MFLOPS | 100 MFLOPS - 10 GFLOPS | 10 GFLOPS - 1 TFLOPS | > 1 TFLOPS |
| <100KB | <100Kb/s | 1 | 2 | | | |
| 100KB - 1MB | 100Kb/s - 1Mb/s | 3 | 4 | 5 | | |
| 1MB - 10MB | 1Mb/s - 10Mb/s | | 6 | 7 | 8 | |
| 10MB - 1GB | 10 - 100Mb/s | | | 9 | 10 | 11 |
| >1GB | >100Mb/s | | | | 12 | 13 |

Communication Chanel

Narrowband

Wideband

Complexity

Processors

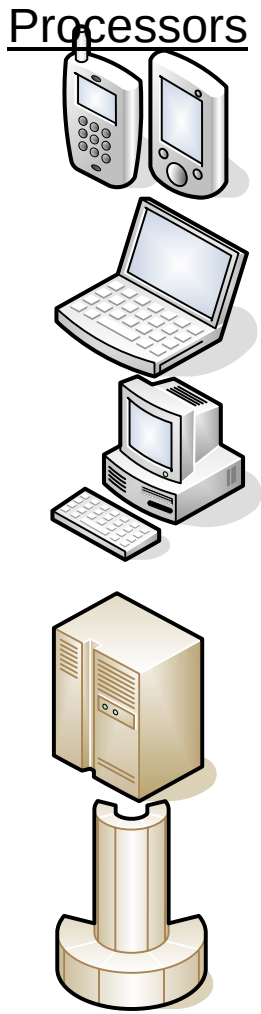



© 2004, Open Geospatial Consortium, Inc.

# Operational Domains Using Sensor Data

Need to Share Data Across Operational Domains

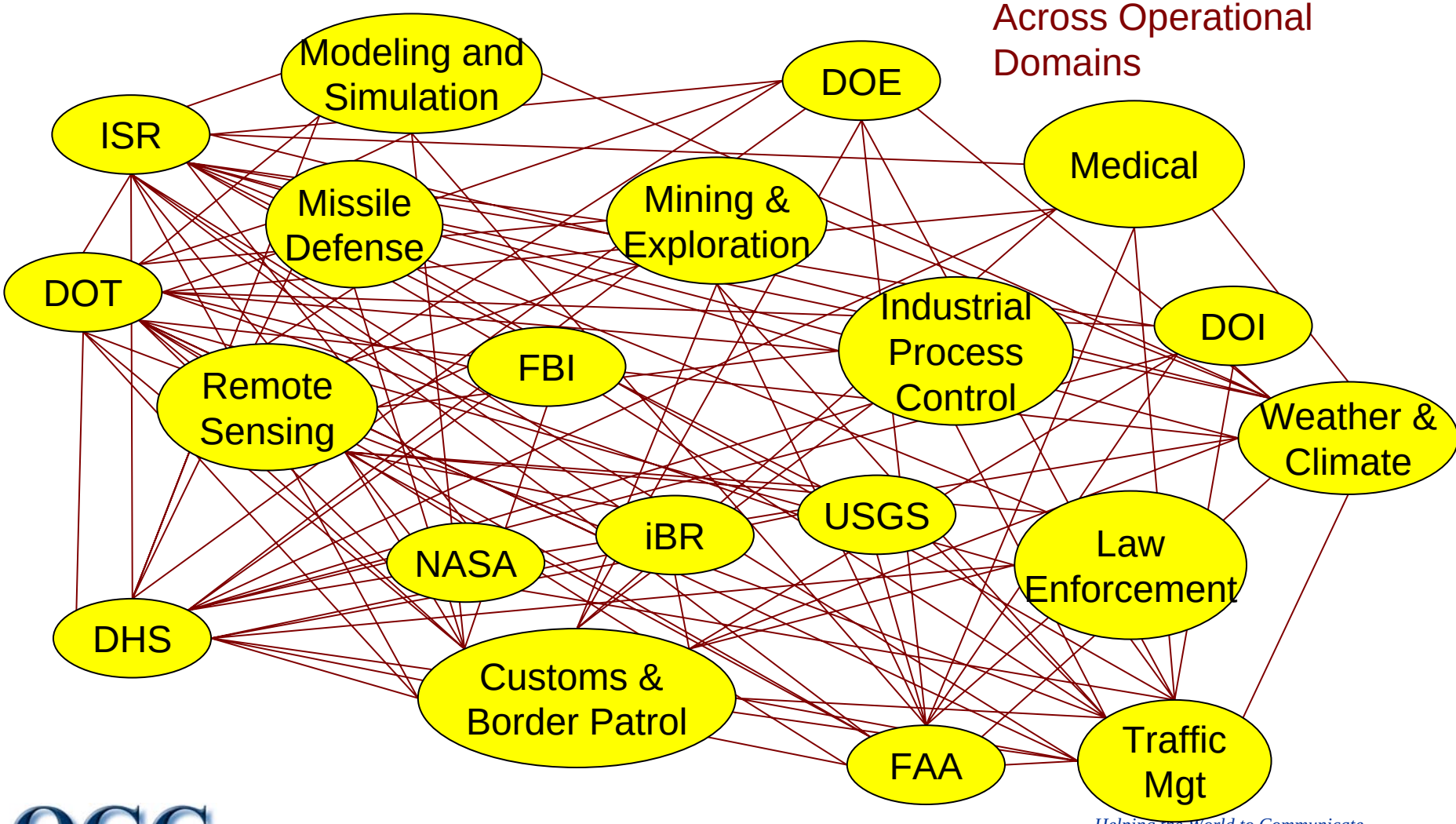


OGC

*Helping the World to Communicate Geographically*

© 2004, Open Geospatial Consortium, Inc.

# Transducer Data Exchange Requirements

- **Transducer Data Fusion**
  - Must Enable:
    - Low-level Sensor Data Fusion - correlation, registration and association of streaming multi-transducer data
    - Sensor Fusion at the Phenomenology Level
- **Simplify Transducer Data Exchange**
  - **Interoperable scalable, accurate, efficient exchange of transducer data (measurement & action)**
  - Must Enable:
    - Live and archive exchange of transducer data within and across
    - Common processing & control of transducer systems
    - Precision geo-positioning of transducer data with error propagation
    - Scalable simple to complex solutions
    - Support Peer-to-peer, Client-Server, & SOA architectures
    - Post-before-process


© 2004, Open Geospatial Consortium, Inc.

# What is TML

- **TML is a language for exchanging streaming transducer command & status data**
  - Between a transducer system and a transducer processor/service
  - Self-describing
  - Based on XML (archive or live data)
- **The language communicates**
  - Streaming Transducer data
  - Transducer metadata
  - Metadata is tightly coupled with data

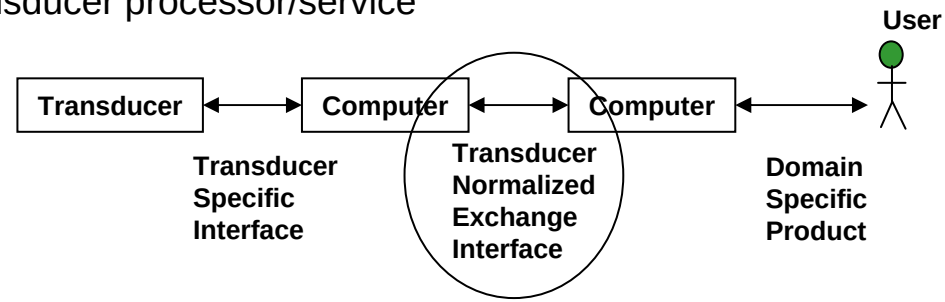


- **Sensor Metadata characterizes the "What", "When" and "Where" of data**
- **Normalizes data for exchange**
  - Standardized spatial, temporal, phenomenon value, and UOM.
  - Data traceable to an enterprise datum (space, time, value)
- **TML is Sensor Agnostic**
  - Metadata is Common for all Type Sensors
  - Enables a "Common Sensor Processor"
- **TML is Application Domain Agnostic**
- **TML is for Machine-to-Machine data exchange**
  - Historical, live, and future time precision time tagged messages

***TML role is not to describe how to represent data**
***Relies on other ontologies and taxonomies to carry domain specific data**
***Relies on other services for communication, security, discovery, delivery, representation, etc.**


© 2004, Open Geospatial Consortium, Inc.

# TML Fundamental Concepts

- A transducer is a transducer
  - A transducer in one application domain is the same as a transducer in another application domain
  - TML exchanges only transducer data and technical description (physics based)
- No Domain Admin data
  - Application specific data should be carried external to TML elements
- Multiple transducers may comprise a system
  - Complementary transducers (relations)
- Transducers response is a time function (streaming)
  - High resolution time tagging
- Transducer data may be processed (compressed, encoded, encrypted..)
  - Processing pedigree
- A transducer interfaces data-to-physical phenomenon
  - bidirectional
- A physical phenomenon is related to a physical object (matter, energy)
- Every unit in data stream must have unique time, space and value
- Every value should be qualified with an uncertainty
- Minimize live transport overhead
  - Non-verbose markup
  - Clustering
- Don’t mix asynchronous data
- Make physical transducer interface transparent to client


© 2004, Open Geospatial Consortium, Inc.

# How TML works

- Minimal processing to raw transducer data stream
  - Separate data types
- Insert TML data tags at strategic points in sensor data stream
- Data tags contain time tag of when first data in element was
- Describe contents between data tags using TML elements
- Exchange data and description
- Common processing environment configures it self to process data stream


© 2004, Open Geospatial Consortium, Inc.

# TML Scope

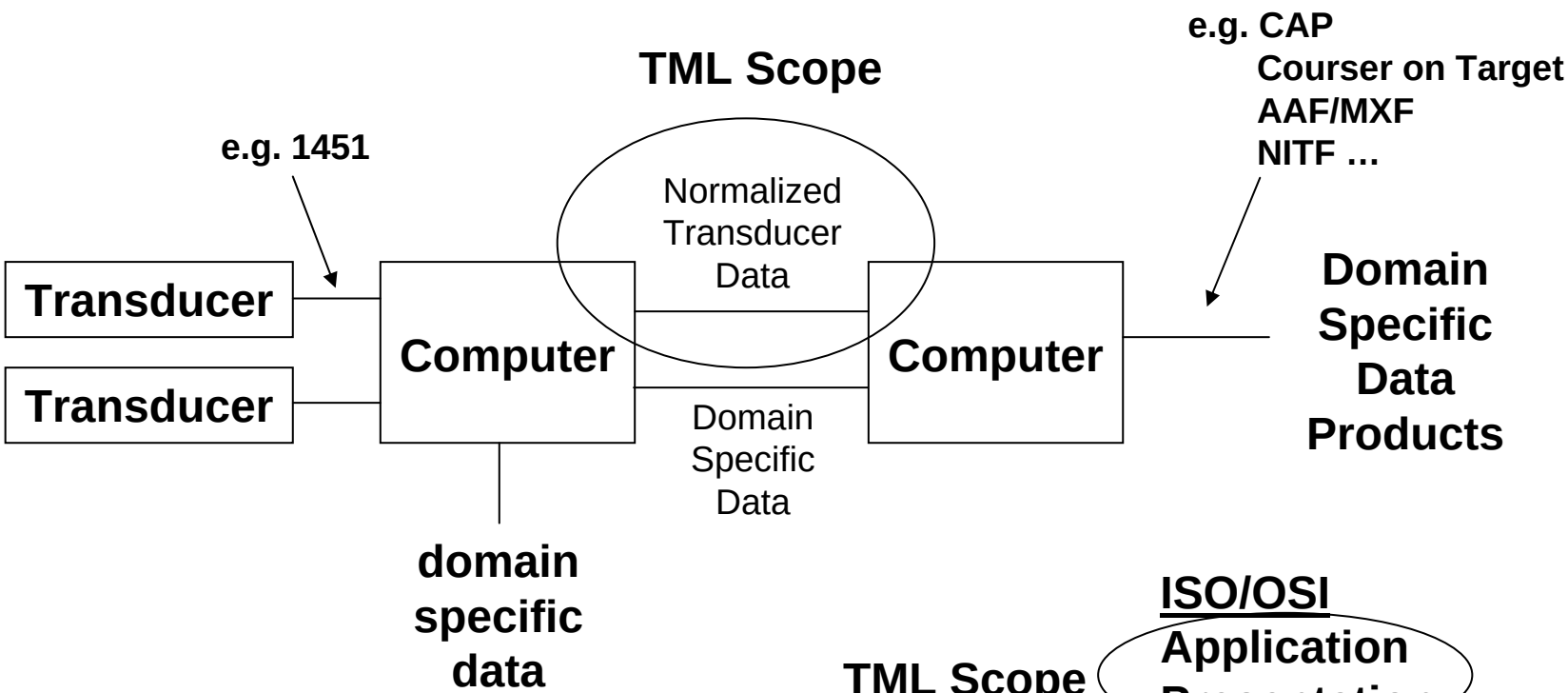


**TML Scope**

**ISO/OSI**
**Application**
**Presentation**
**Session**
**Transport**
**Network**
**Link**
**Physical**

*Transport independent*

# Common Processing Environment

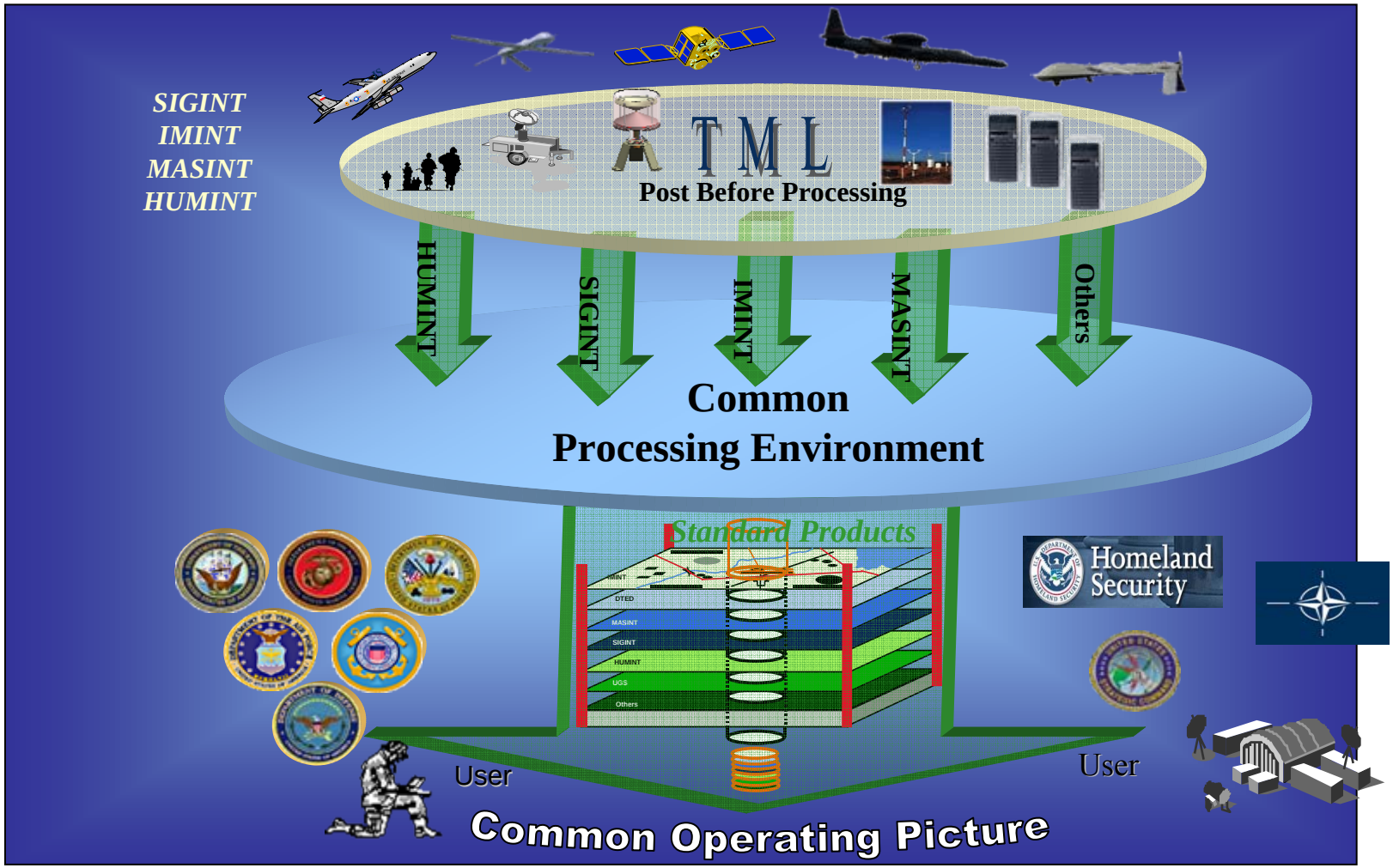



© 2004, Open Geospatial Consortium, Inc.

# Example:
# Sensor-actuator

i.e Transducer

**TML Maps data to phenomenon**

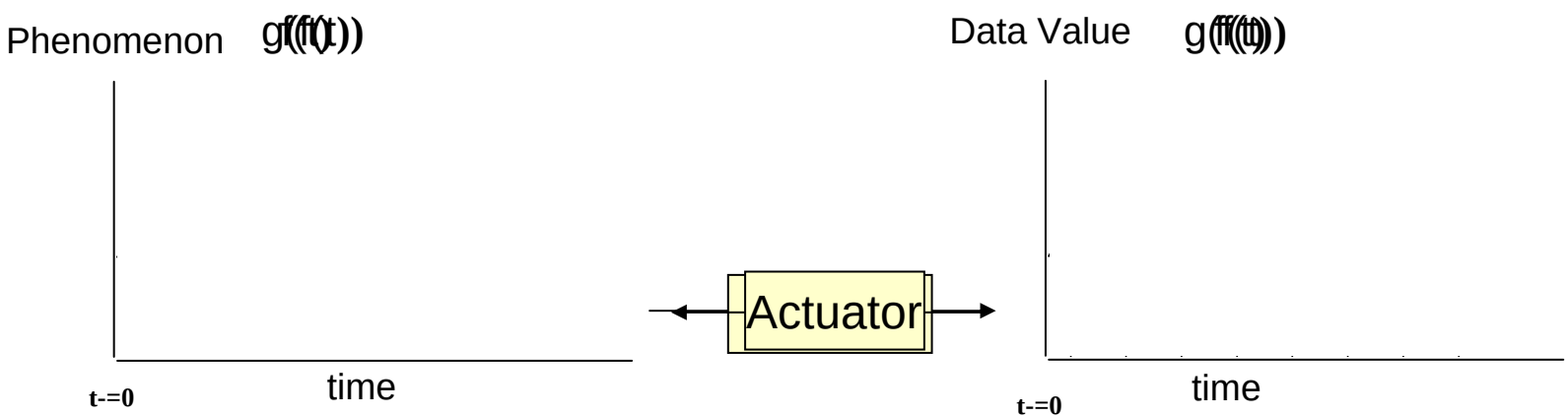


```
<data clk="0" ref="actuator1">08</data>
<data clk="1" ref="actuator1">10</data>
<data clk="2" ref="actuator1">03</data>
<data clk="3" ref="actuator1">04</data>
<data clk="4" ref="actuator1">08</data>
<data clk="5" ref="actuator1">08</data>
<data clk="6" ref="actuator1">09</data>
<data clk="7" ref="actuator1">05</data>
```


© 2004, Open Geospatial Consortium, Inc.

# TML & XML

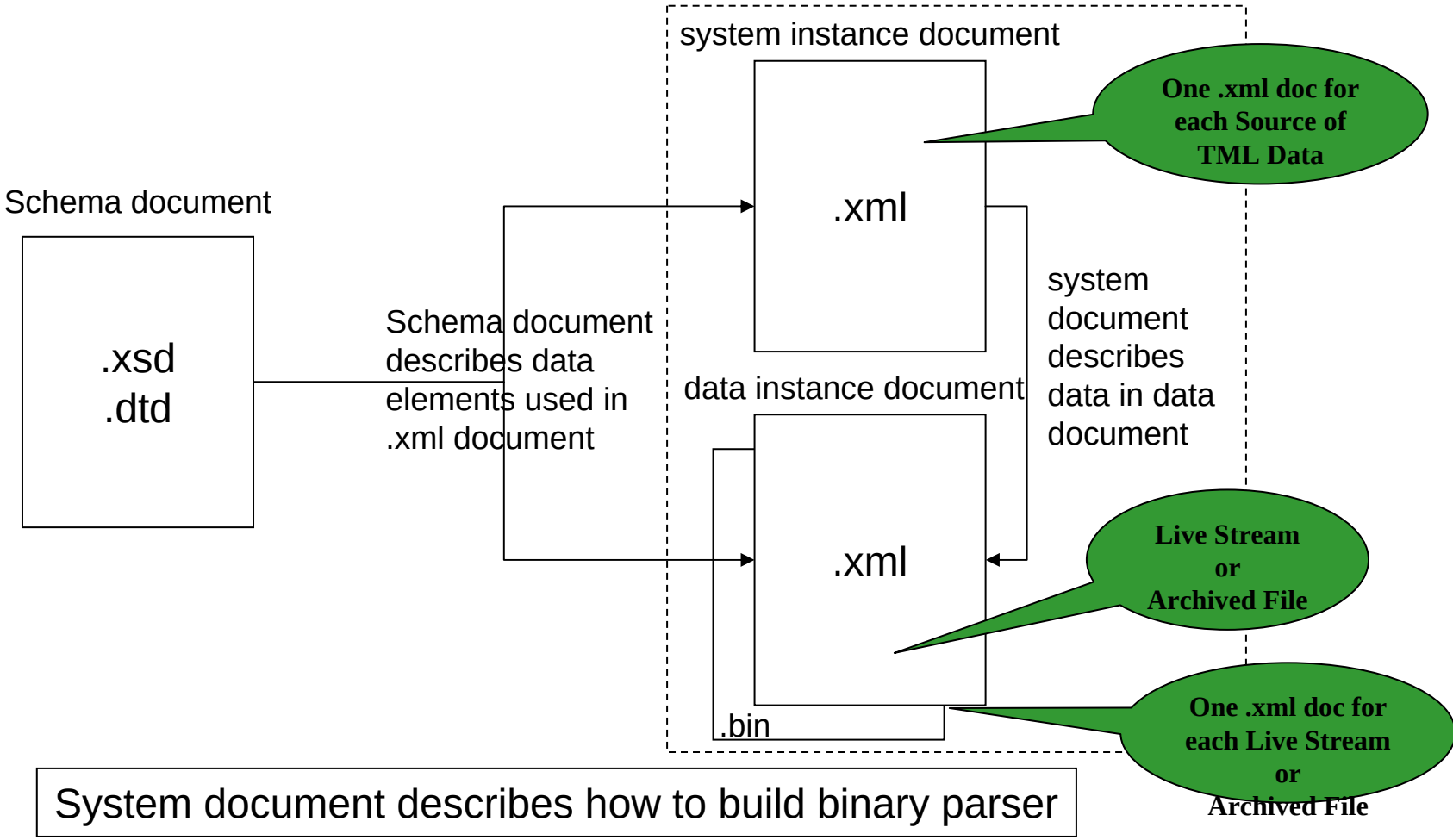


System document describes how to build binary parser



© 2004, Open Geospatial Consortium, Inc.

# TML Concepts:
## Data & Metadata (data description)

**Data**

010101010010101100101010
101010110101000101010101
010101010111101011010101
010101010101010101101010
101010101101010101010101
010101010110101011010101
101010101101010100010111
101010101010101001011110
110101001000010101010111
111011011000000110101010
10101010101000010101010101
1101…

? ?

**Metadata (Data Description)- may change, Can describe changing metadata as a streaming virtual sensor**

**Metadata (Data Description)**

1. Format, data encoding, transport data structure, parsing, sequencing
2. Transducer data model
   - **a. Logical Data structure**
   - **b. Interior spatial geometry**
   - **c. Interior temporal model**
   - **d. Response model**
3. Process data model
   - a. Input(s)
   - b. Output
   - c. Parameters
   - d. Method
4. System component relationships
   - **a. Exterior spatial geometry**
   - **b. Exterior Time**
   - **c. Metadata to data linking**
   - **d. Object to phenomenon linkage**
   - **e. Remote medium**
   - **f. Data flow transducer-process, process-process**


© 2004, Open Geospatial Consortium, Inc.

# TML Framework

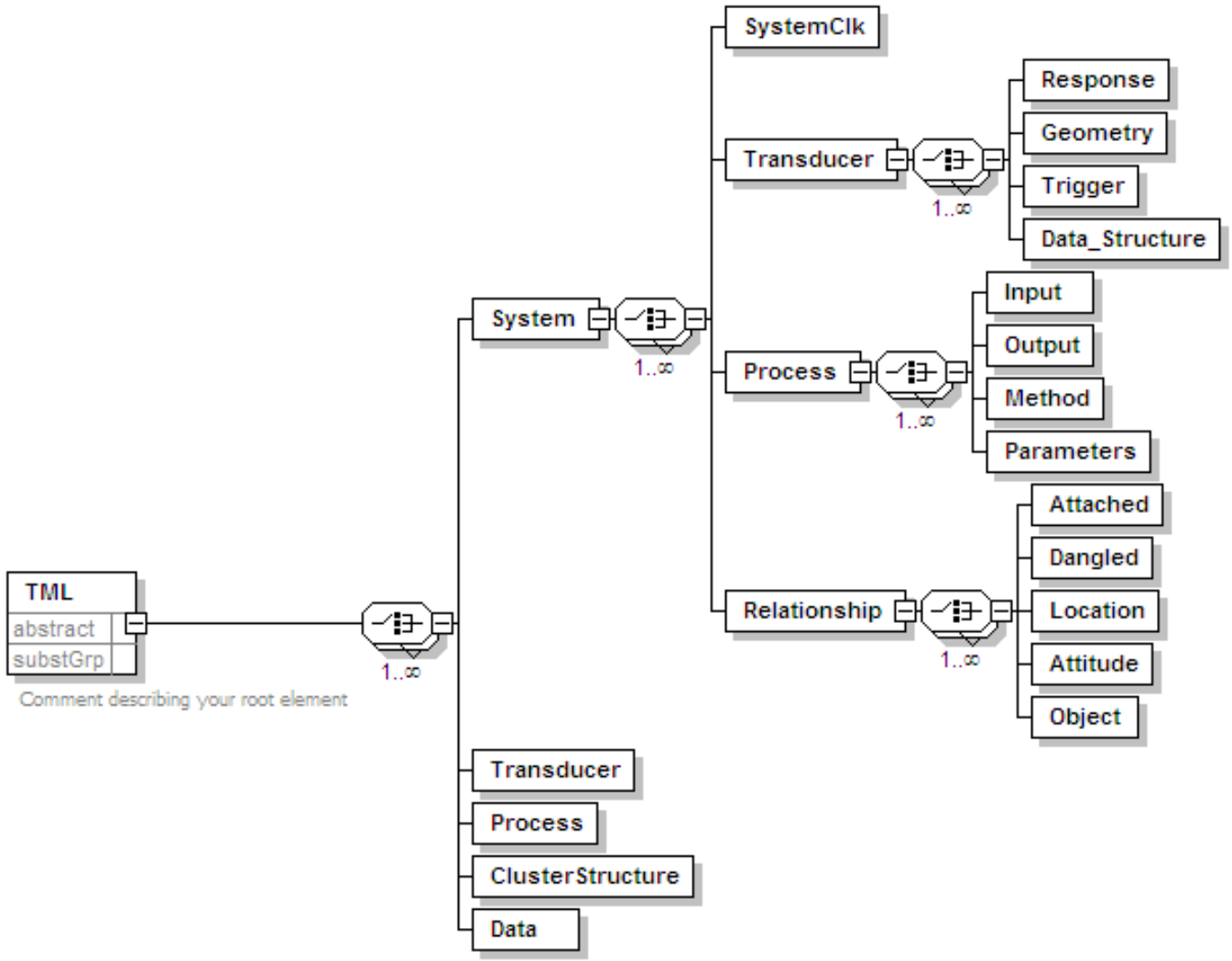


Generated with XMLSpy Schema Editor www.altova.com

*World to Communicate ally*

# Raw Radar Data Characterization with TML

***Characterizes the System & Attributes***

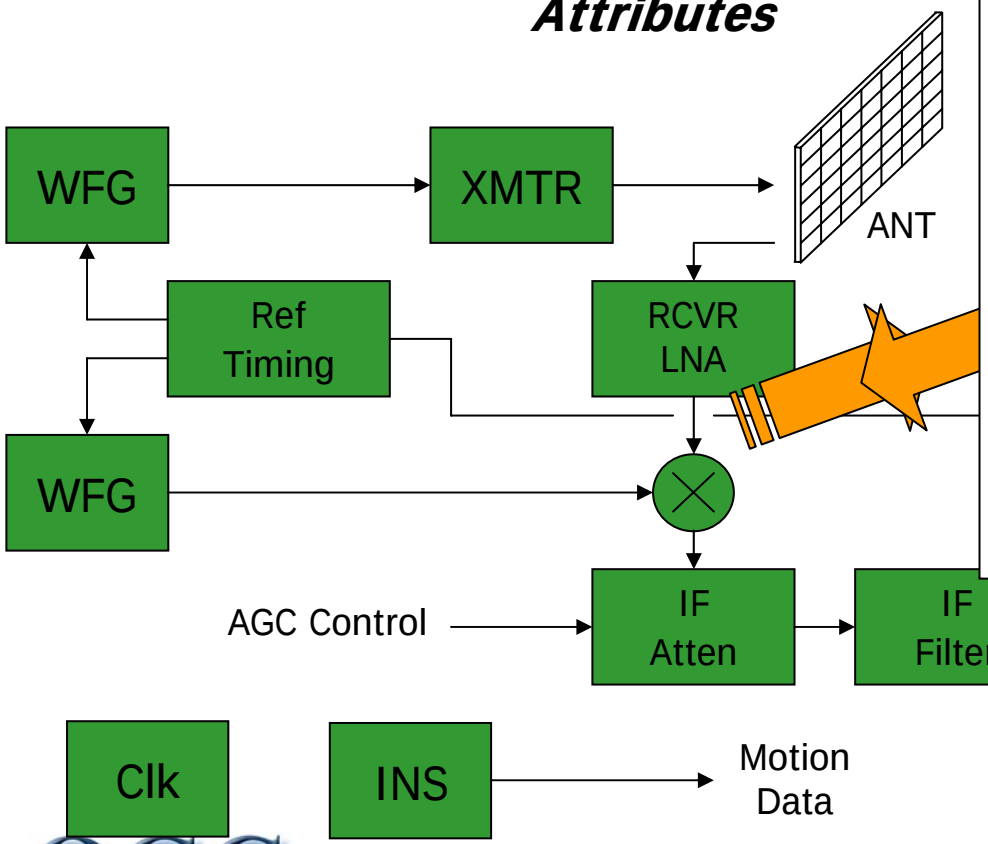


```
<?xml version="1.0" encoding="UTF-8"?>
<tml version="0.92beta 030727">
 <System urn="http://www.tml.org/sys/22"/>
   <transducer type="rec" urn="http://www.tran
   <transducer type="xmtr" urn="http://www.rec
   <process name="WFG" urn="http://www.wfg.com
…
   <process name="mixer" urn="http://www.mix.c
   <link nodeid="1"
      <connect=http://www.wfg.com/p45/out/>
      <connect="http://www.trans.com/t4/in"/>
…
   <link nodeid="11"
      <connect uid ="http://www.xyz.com/p76/ou
      <connect uid ="http://www.abc.com/p166/i
   <product>
      <tap id="1" nodeid="4"/>
…
      <tap id=5 nodeid="5"/>
   </product>
</System>
</tml>
```



© 2004, Open Geospatial Consortium, Inc.

# Raw Radar Data Characterization with TML

***Characterizes the Dynamic Con***
***and Data Outpu***

```
<tml>
   <system href:xlink="http://www.tml.org/sys/22"/>
   <data id="tap1" clk="0">0.0 16.3 0.51345 200.0</data>
   <data id="tap5" clk="222">0.0 18.2 0.51345 230.0</dat
   <data id="tap6" clk="870">33.216 -112.214 ...  </data
   <data id="tap1" clk="1000">0.0 16.3 0.51345</data>
   <data id="tap5" clk="1221">0.0 18.2 0.51345 230.0</da
   <data id="tap4" clk="1879">76</data>
   <data id="tap1" clk="2000">0.0 16.3 0.51345</data>
   <data id="tap5" clk="2221">0.0 18.2 0.51345 230.0</da
   <data id="tap5" clk="2578">0.0 18.2 0.51345 230.0</da
   <data id="tap6" clk="2764">33.216 -112.214 ...  </dat
   <data id="tap1" clk="2810">0.0 16.3 0.51345</data>
   <data id="tap5" clk="2873">0.0 18.2 0.51345 230.0</da
   <data id="tap4" clk="2645">76</data>
   <data id="tap1" clk="2879">0.0 16.3 0.51345</data>
   <data id="tap5" clk="2906">0.0 18.2 0.51345 230.0</da
   …
</tml>
```

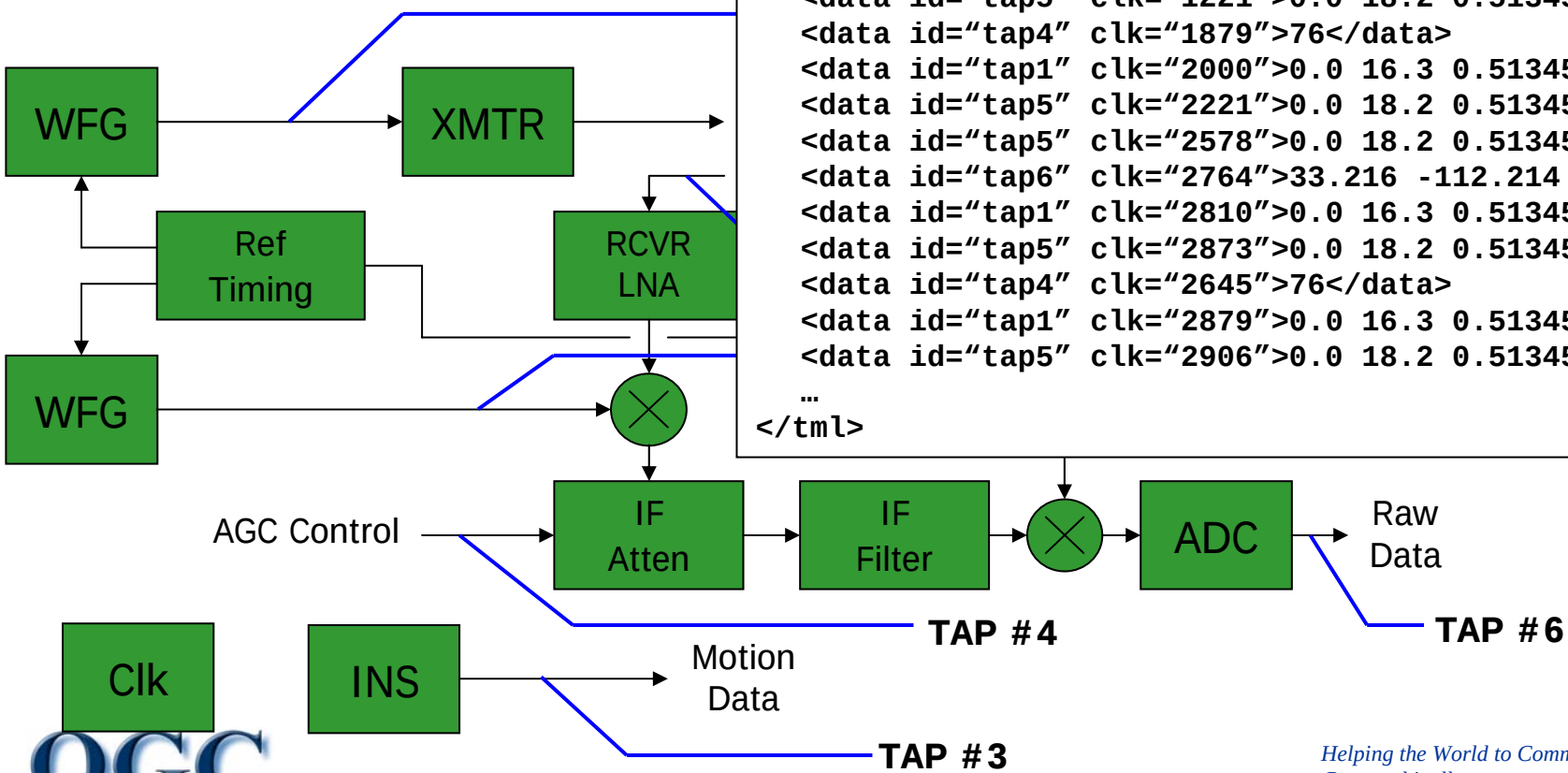




© 2004, Open Geospatial Consortium, Inc.

# Radar Transducer Data

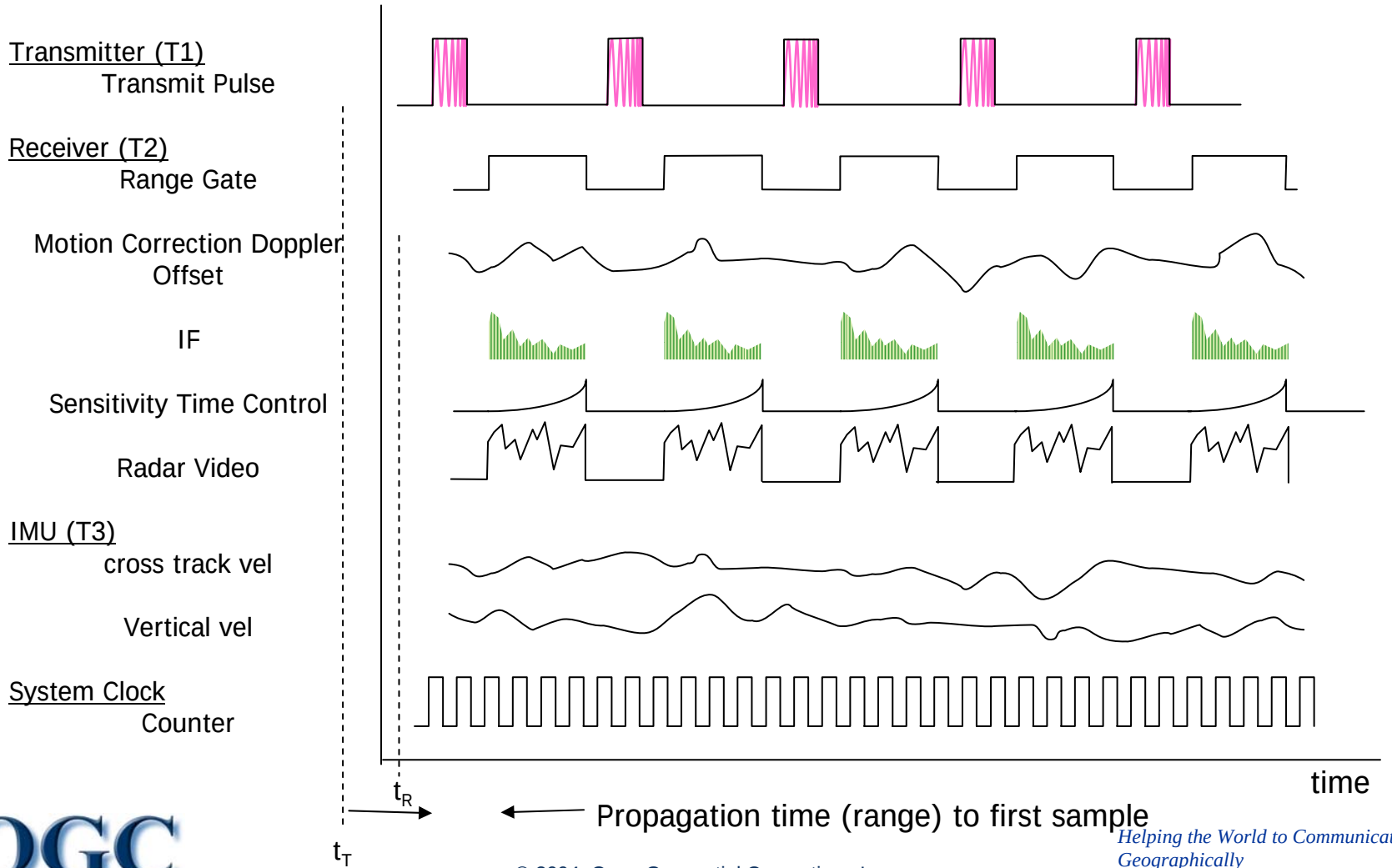




© 2004, Open Geospatial Consortium, Inc.

# Transducer System

- Identifications
- Security
- Specifications
  - SWAP, …
- Physical Components
- Transducers
- Processes
- Relations
  - Logical, physical
- Cluster descriptions of data taps
  - Encoding
  - Sequencing

© 2004, Open Geospatial Consortium, Inc.

# Example:
# TML Transducer System

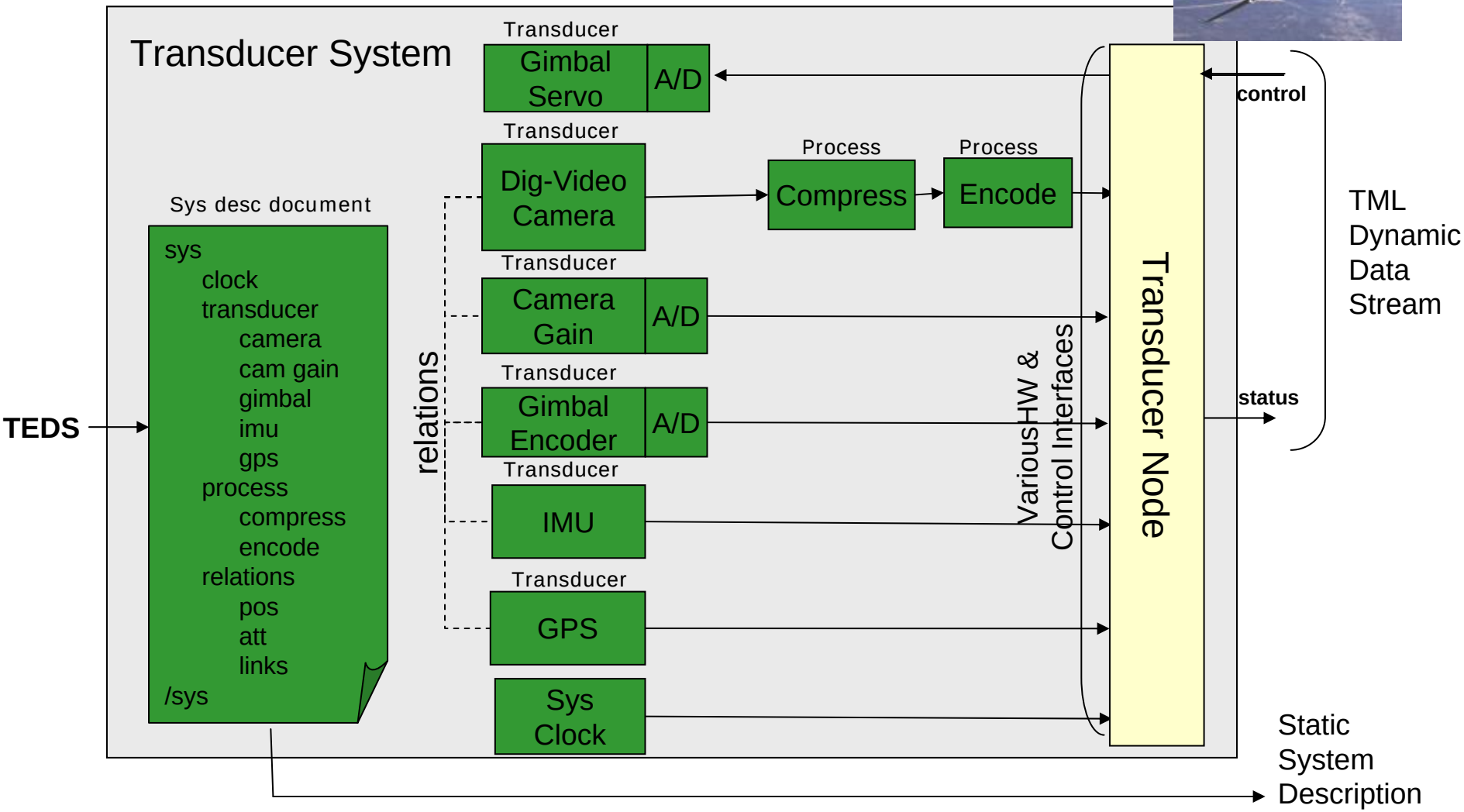




© 2004, Open Geospatial Consortium, Inc.

# Example TML Stream

- Sensor Status Stream

  <system href:xlink="http://www.tml.org/sys/22"/>
  <data id="cam" clk'"3486"> </data>
  <data id="gimbal" clk="3574">1.3</data>
  <data id="GPS" clk="3652">32.1234,-834583,254,12.5,32.4,2005,09,29T23:13:56.124</data>
  <data id="IMU" clk="3669">1.1,-0.2,34.3</data>
  <data id="gain" clk="3755">1.2</data>
  <data id="cam" clk="3886"> </data>
  <data id IMU clk="4272">1.0,-0.1,35.1</data>
  <data id GPS clk="4275"> 32.1234,-834583,254,12.5,32.4,2005,09,29T23:13:56.625</data>
  <data id="cam" clk="4286"> </data>
  <data id="gimbal" clk="4533"><-2.7</data>
  <data id="cam" clk="4686"> </data>

- Actuator Command Stream

  <system href:xlink="http://www.tml.org/sys/22"/>
  <data id="gimbal" clk="3571">1.2</data>
  <data id="gimbal" clk="4530">-2.7</data>
  <data id="gimbal" clk="5291">1.6</data>


© 2004, Open Geospatial Consortium, Inc.

# Asynchronous Sampling in a Multi-sensor System

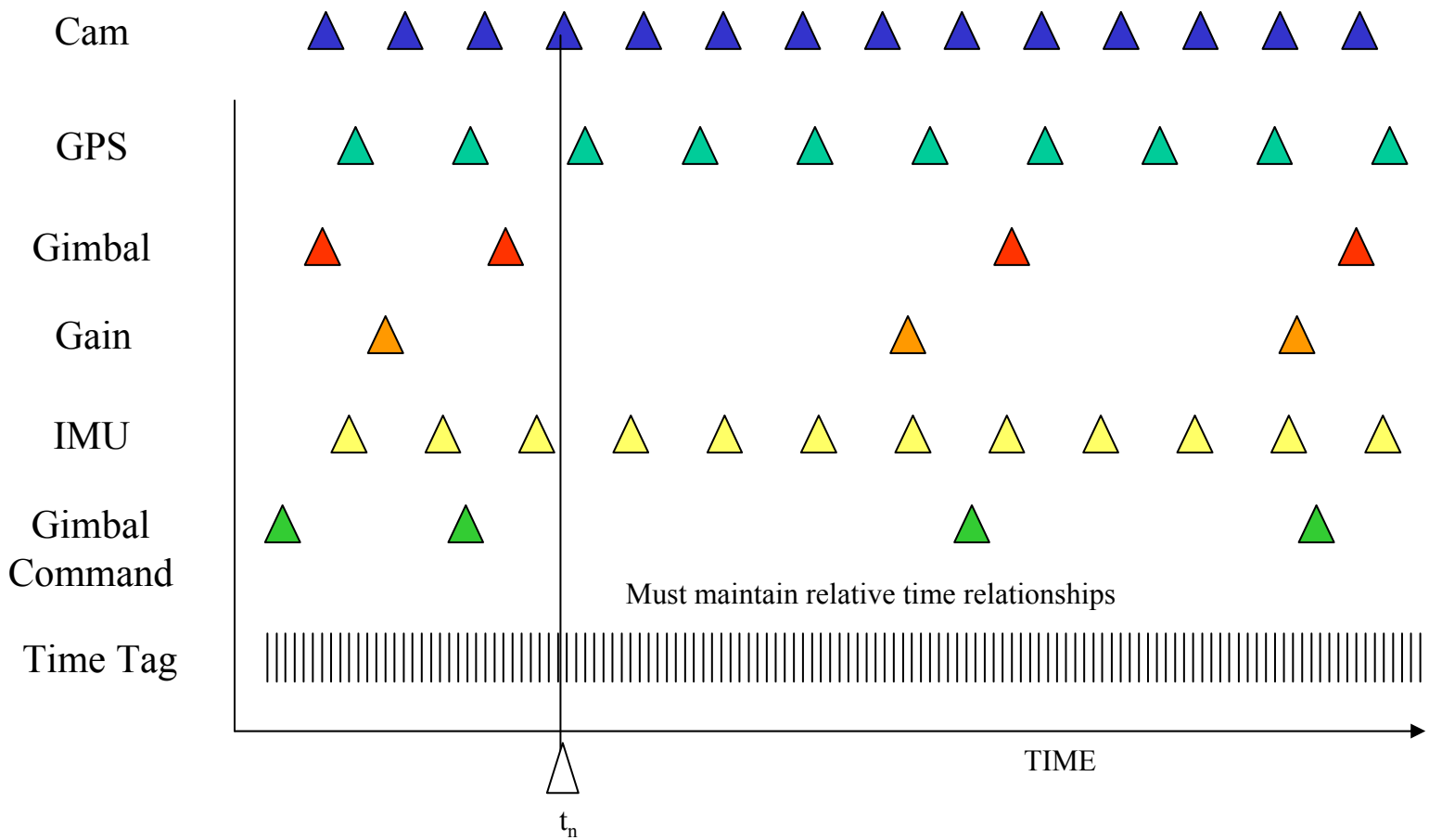




© 2004, Open Geospatial Consortium, Inc.

# Example:
# Time Sequence of Sensor Events

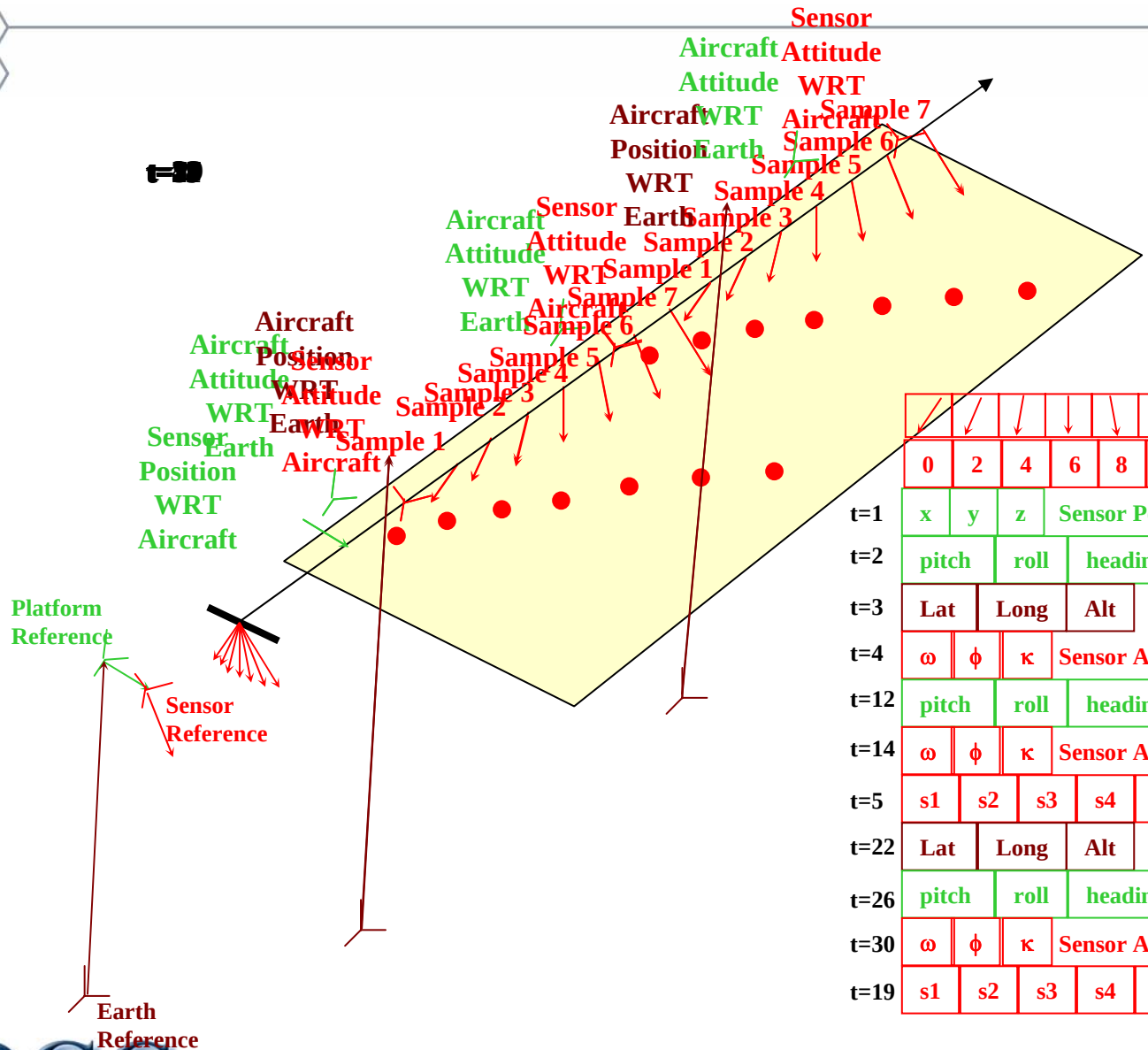


| | | | | | | | | |
|---|---|---|---|---|---|---|---|---|
| | 0 | 2 | 4 | 6 | 8 | 10 | 12 | |
| t=1 | x | y | z | | | | | Sensor Position WRT GPS |
| t=2 | pitch | roll | heading | | | | | Aircraft Attitude WRT Earth |
| t=3 | Lat | Long | Alt | | | | | Aircraft Position WRT Earth |
| t=4 | ω | ϕ | κ | | | | | Sensor Attitude WRT IMU |
| t=12 | pitch | roll | heading | | | | | Aircraft Attitude WRT Earth |
| t=14 | ω | ϕ | κ | | | | | Sensor Attitude WRT IMU |
| t=5 | s1 | s2 | s3 | s4 | s5 | s6 | s7 | Sensor Frame |
| t=22 | Lat | Long | Alt | | | | | Aircraft Position WRT Earth |
| t=26 | pitch | roll | heading | | | | | Aircraft Attitude WRT Earth |
| t=30 | ω | ϕ | κ | | | | | Sensor Attitude WRT IMU |
| t=19 | s1 | s2 | s3 | s4 | s5 | s6 | s7 | Sensor Frame |

Sensor model data is only sent once in the beginning



© 2004, Open Geospatial Consortium, Inc.

# Transducer Characteristics

TRANSDUCER SYSTEM
- Identifications
- Security
- Specifications
- Phy Components
- **Transducers**
- Processes
- Relations
- Cluster desc

- Identification
- Security
  - Classification
- Specifications (dictionary items)
  - e.g. SWAP, Connections, TIM, THD, output impedance…
- Type
  - Transmitter or receiver (default)
- Trigger
  - Public or private (default)
- Data Structure
  - Array/set/unit composition of TCF
- Response Model
  - Transfer functions
- Geometry Model
  - Spatial models
  - Temporal models


© 2004, Open Geospatial Consortium, Inc.

# Data Structure

TRANSDUCER SYSTEM
- Identifications
- Security
- Specifications
- Phy Components
- **Transducers**
  - Identification
  - Security
    - Classification
  - Specifications
  - Type
  - Trigger
  - **Data Structure**
  - Response Model
  - Geometry Model
- Processes
- Relations
- Cluster desc

- Arrays (e.g. frames)
  - Sets (e.g. pixels)
    - Units (e.g. components)
- Arrays contain a homogeneous collections of arrays or sets
  - e.g. An array containing 480 subordinate arrays each containing of 640 sets
- Sets contain a heterogeneous collection of arrays or units
  - e.g. A set containing three units
- Units contain a single entity relating to a phenomenon
  - e.g. A unit for a red response (number)
  - e.g. A unit for a green response (number)
  - e.g. A unit for a blue response (number)


© 2004, Open Geospatial Consortium, Inc.

# TML Concepts: Logical Data Structure

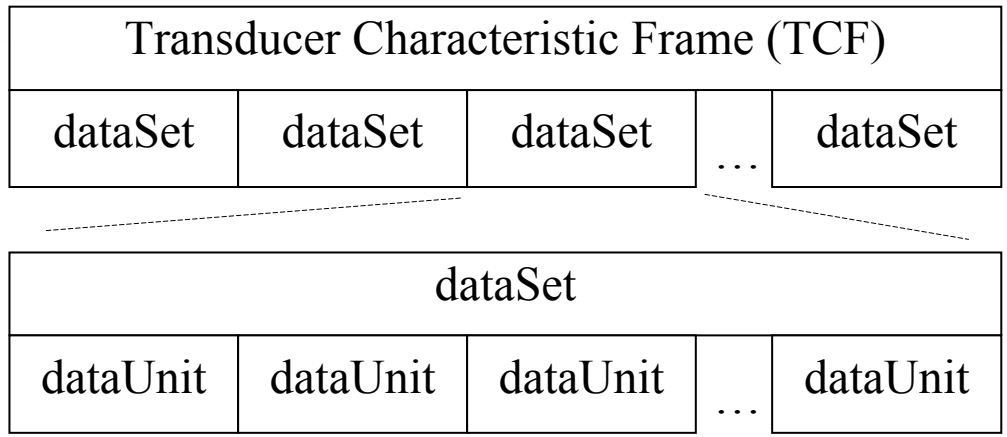


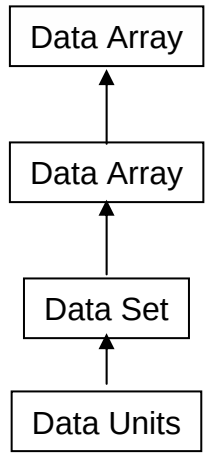


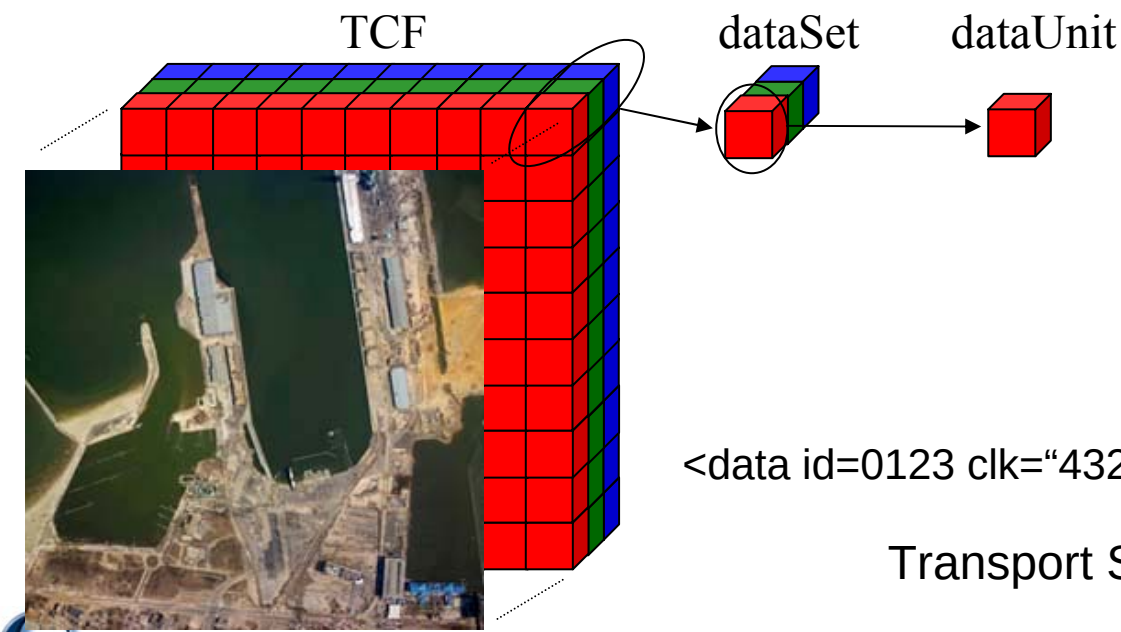


<data id=0123 clk="432654">*…cluster…*</data>

Transport Structure?



© 2004, Open Geospatial Consortium, Inc.

# TML Concepts:
# Transducer Internal Geometry Model

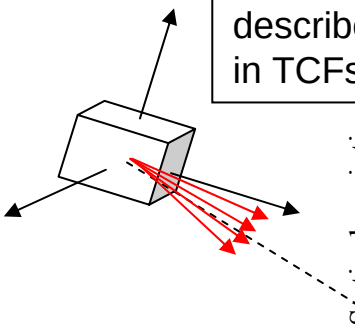

Data is described in TCFs

Static description

Transducer Geometry Model

| data index number | 1 | 2 | 3 | 4 | 5 | 6 | 7 | 8 | 9 | 10 |
|---|---|---|---|---|---|---|---|---|---|---|
| dataset α angle | 1 | .7 | .5 | .3 | .1 | -.1 | -.3 | -.5 | -.7 | -1 |
| dataset β angle | 0 | 0 | 0 | 0 | 0 | 0 | 0 | 0 | 0 | 0 |
| dataSet time | 0 | 1 | 2 | 3 | 4 | 5 | 6 | 7 | 8 | 9 |

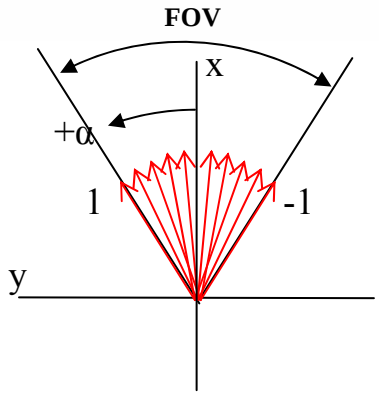


One-to-one correspondence

Data is exchanged in TCFs

Dynamic data (strea

| data index number | 1 | 2 | 3 | 4 | 5 | 6 | 7 | 8 | 9 | 10 | |
|---|---|---|---|---|---|---|---|---|---|---|---|
| <data clk="”3561763”> | | | | | | | | | | | </data> |
| <data clk="”3563764”> | | | | | | | | | | | </data> |
| <data clk="”3565765”> | | | | | | | | | | | </data> |
| <data clk="”3567766”> | | | | | | | | | | | </data> |
| … | | | | | | | | | | | |

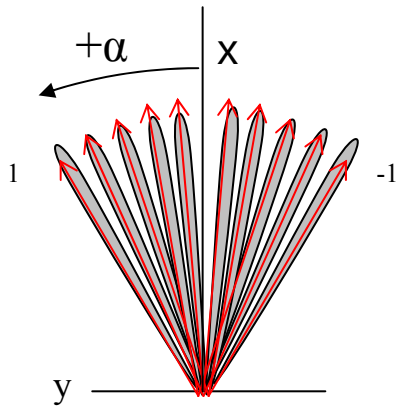


Transducer Characteristic Frame (TCF)




© 2004, Open Geospatial Consortium, Inc.

# TML Concepts: Response Models

- Transfer Function
  - Static
  - Dynamic
- Frequency Response
- Integration Time
- Noise Figure
- Latency Time

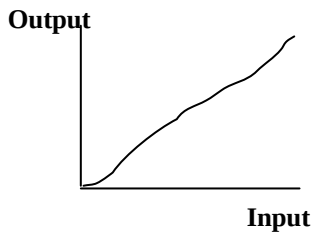


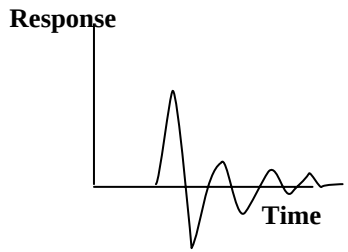


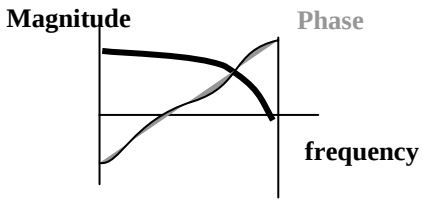



© 2004, Open Geospatial Consortium, Inc.

# Example: data-phenomenon-object Relationship

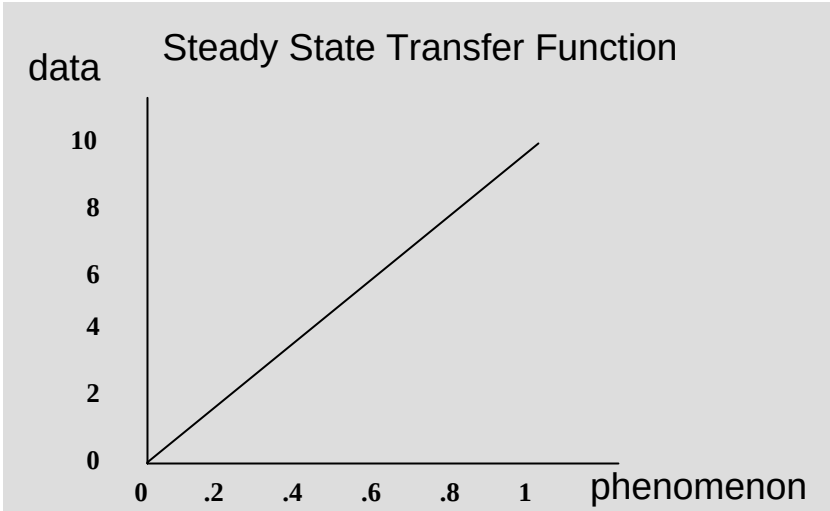


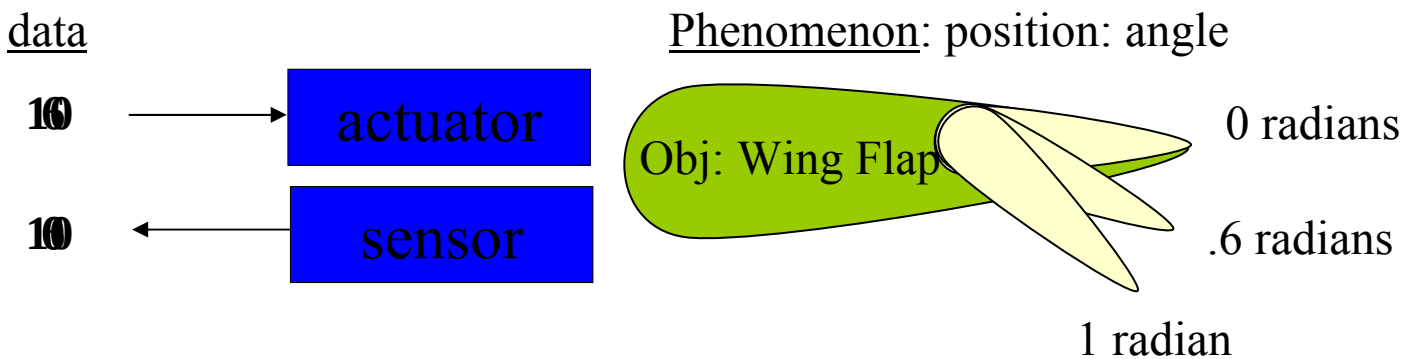




© 2004, Open Geospatial Consortium, Inc.

# Process Characteristics

TRANSDUCER SYSTEM
- Identifications
- Security
- Specifications
- Phy Components
- Transducers
- **Processes**
- Relations
- Cluster desc

- Identification
- Input (0..*)
  - Identification
  - Data Structure
- Output
  - Identification
  - Data Structure
- Method

**Examples**

**Event detection**
**Compression**
**Encryption**
**Histogram**
**Mixing**
**Filtering**
**FFT/IFFT**
**…**


© 2004, Open Geospatial Consortium, Inc.

# Relationships

TRANSDUCER SYSTEM
- Identifications
- Security
- Specifications
- Phy Components
- Transducers
- Processes
- **Relations**
- Cluster desc

## Physical Relationships

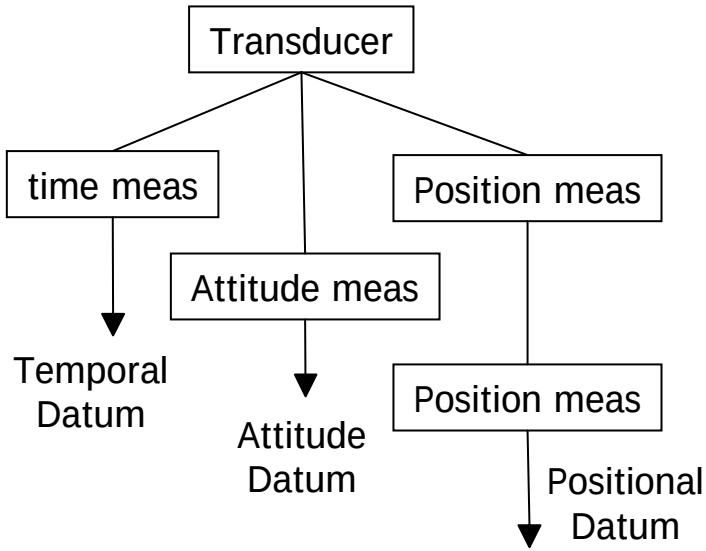


## Logical Relationships

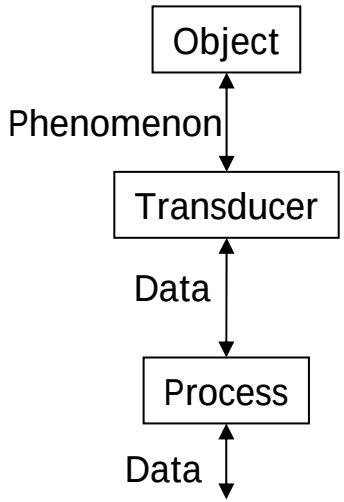


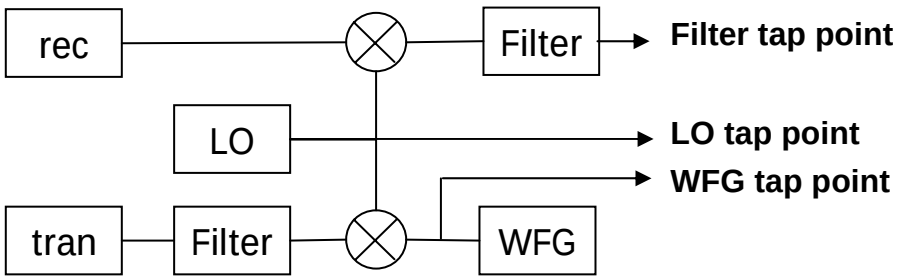




© 2004, Open Geospatial Consortium, Inc.

# Data Cluster Description

TRANSDUCER SYSTEM
- Identifications
- Security
- Specifications
- Phy Components
- Transducers
- Processes
- Relations
- **Cluster desc**

- Transport order of data relative to logical structure
- Clustering TCF to improve transport efficiency
- Data encoding of data units
  - Binary/XML
  - Numeric/text
  - Numeric base
  - Number of bits
  - Text encoding (UTF-8, UCS..)
  - Numeric encoding (unsignedINT, signedINT, real, BCD, B16…)


© 2004, Open Geospatial Consortium, Inc.